Publication 1220

Specifications for Electronic Filing of Forms
1097, 1098, 1099, 3921, 3922, 5498, and W-2G.

Tax Year 2014

First Time Filers Quick Reference Guide

1. Submit Form 4419, *Application for Filing Information Returns Electronically*, to request authorization to file Forms 1097, 1098 Series, 1099 Series, 3921, 3922, 5498 Series, 8027, 8955-SSA, 1042-S, and W-2G electronically through the Filing Information Returns Electronically (FIRE) System. Allow a 45-day processing timeframe before the earliest due date of the information returns to receive a Transmitter Control Code (TCC). Form 4419 is subject to review before the approval to transmit electronically is granted and may require additional documentation at the request of the Internal Revenue Service (IRS). If a determination is made concerning the validity of the documents transmitted electronically, the IRS has the authority to revoke the Transmitter Control Code (TCC) and terminate the release of files. Refer to Part B, Sec.1, *Application for Filing Information Returns Electronically.*

2. Electronic Filing – you are required to establish an account on the FIRE System before transmitting files electronically. For more information on creating a User ID, Password, PIN requirements, and connecting to the FIRE System, refer to Part B, *Data Communication*.

3. File Format – The format must conform to the specifications found in Publication 1220, Part C, *Record Format Specifications and Record Layouts*. Filers may contact an outside vendor to purchase software or transmit files. To find software providers, perform an internet search with the keywords, “Form 1099 software providers”.

4. Test Files – Filers are not required to submit a test file; however, the IRS encourages the submission of a test file for all new electronic filers to test hardware and software. Refer to Part B, Sec. 6, *Test Files*. A test file is only required when applying to participate in the Combined Federal/State Filing Program. Refer to Part A, Sec. 11, *Combined Federal/StateFiling Program.*

5. Common Problems – Review Part B, Sec. 7, *Common Problems* to avoid common processing and/or format errors before submitting your file.

6. Assistance - Contact the IRS 1-866-455-7438 Monday through Friday from 8:30 am to 4:30 pm ET.

7. The following is a list of related instructions and forms for filing information returns electronically:
   - 2014 General Instructions for Certain Information Returns
   - Form 4419, *Application for Filing Information Returns Electronically (FIRE)*
   - Form 8508, *Request for Waiver from Filing Information Returns Electronically*
   - Form 8809, *Application for Extension of Time To File Information Returns*

TABLE OF CONTENTS

Part A. Introduction and General Information

Sec. 1 Introduction . . . 9
Sec. 2 Purpose . . . 9
Sec. 3 What's New For Tax Year 2014 . . . 10
Sec. 4 Communicating with the IRS . . . 12
Sec. 5 Additional Resources . . . 12
Sec. 6 Filing Requirements, Retention Requirements, and Due Dates . . . 13
.01 Filing Requirements . . . 13
.02 Retention Requirements . . . 14
.03 Due Dates . . . 14
Sec. 7 Extensions . . . 14
Sec. 8 Form 8508, Request for Waiver from Filing Information Returns Electronically . . . 14
Sec. 9 Penalties Associated with Information Returns . . . 15
Sec. 10 Corrected Returns . . . 15
.01 General Information . . . 15
.02 Error in Reporting the Payer . . . 16
.03 Specifications for Filing Corrected Returns Electronically . . . 16
.04 Corrections and Penalties . . . 17
.05 Corrected Returns Procedures . . . 17
Sec. 11 Combined Federal/State Filing Program . . . 20
.01 General . . . 20
.02 Testing . . . 20
Sec. 12 State Abbreviation Codes and APO/FPO Addresses . . . 22
Sec. 13 Definition of Terms . . . 23

Part B. Data Communication

Sec. 1 Application for Filing Information Returns Electronically . . . 27
.01 Form 4419, Application for Filing Information Returns Electronically . . . 27
.02 Do I Need More than One TCC? . . . 27
.03 Application Approval . . . 27
.04 Updating Information on Form 4419 . . . 27
Sec. 2 User ID, Password and PIN Requirements . . . 28
Sec. 3 Connecting to FIRE . . . 28
Sec. 4 Electronic Specifications . . . 30
.01 FIRE System . . . 30
.02 FIRE System Internet Security Technical Standards . . . 30
Sec. 5 Electronic Submissions . . . 30
.01 Electronic Submissions . . . 30
.02 File Definitions . . . 31
.03 Submission Responses . . . 31
Sec. 6 Test Files . . . 31
Sec. 7 Common Problems . . . 32
Sec. 8 Common Formatting Errors . . . 33

Part C. Record Format Specifications and Record Layout

File Format Diagram . . . 37
Sec. 1 Transmitter "T" Record . . . 39
Sec. 2 Payer "A" Record . . . 44
Sec. 3 Payee "B" Record . . . 60
Sec. 4 End of Payer "C" Record . . . 109
Sec. 5 State Totals "K" Record 1 . . . 111
Sec. 6 End of Transmission "F" Record . . . 113

Part D. Extension of Time

Sec. 1 Extension of Time . . . 117
.01 Application for Extension of Time to File Information Returns . . . 117
.02 Request for Additional Extension of Time . . . 117
.03 Extension of Time for Recipient Copies of Information Returns . . . 118
Extension of Time Record Layout . . . 118

Part E. Exhibits

Exhibit 1 Name Control . . . 123
Exhibit 2 Publication 1220 Updates . . . 129

Part A. Introduction and General Information

Sec. 1 Introduction

This publication outlines the communication procedures and transmission formats for the following information returns:

- Form 1097-BTC, *Bond Tax Credit*
- Form 1098, *Mortgage Interest Statement*
- Form 1098-C, *Contributions of Motor Vehicles, Boats, and Airplanes*
- Form 1098-E, *Student Loan Interest Statement*
- Form 1098-T, *Tuition Statement*
- Form 1099-A, *Acquisition or Abandonment of Secured Property*
- Form 1099-B, *Proceeds From Broker and Barter Exchange Transactions*
- Form 1099-C, *Cancellation of Debt*
- Form 1099-CAP, *Changes in Corporate Control and Capital Structure*
- Form 1099-DIV, *Dividends and Distributions*
- Form 1099-G, *Certain Government Payments*
- Form 1099-INT, *Interest Income*
- Form 1099-K, *Payment Card and Third Party Network Transactions*
- Form 1099-LTC, *Long-Term Care and Accelerated Death Benefits*
- Form 1099-MISC, *Miscellaneous Income*
- Form 1099-OID, *Original Issue Discount*
- Form 1099-PATR, *Taxable Distributions Received From Cooperatives*
- Form 1099-Q, *Payments from Qualified Education Programs (Under Sections 529 & 530)*
- Form 1099-R, *Distributions from Pensions, Annuities, Retirement or Profit-Sharing Plans, IRAs, Insurance Contracts, etc.*
- Form 1099-S, *Proceeds From Real Estate Transactions*
- Form 1099-SA, *Distributions From an HSA, Archer MSA, or Medicare Advantage MSA*
- Form 3921, *Exercise of an Incentive Stock Option Under Section 422(b)*
- Form 3922, *Transfer of Stock Acquired Through an Employee Stock Purchase Plan under Section 423(c)*
- Form 5498, *IRA Contribution Information*
- Form 5498-ESA, *Coverdell ESA Contribution Information*
- Form 5498-SA, *HSA, Archer MSA, or Medicare Advantage MSA Information*
- Form W-2G, *Certain Gambling Winnings*

Sec. 2 Purpose

The purpose of this publication is to provide the specifications for electronic filing of Form(s) 1097, 1098, 1099, 3921, 3922, 5498, and W-2G electronically with Internal Revenue Service (IRS). This publication also provides the requirements and specifications for electronic filing under the Combined Federal/State Filing Program (CF/SF).

Generally, boxes on paper forms correspond with fields used for the electronic file; however, if the form and field instructions do not match, the guidance in this publication supersedes form instructions. Electronic reporting of information returns eliminates the need for electronic filers to file paper documents to the IRS. Do not send copies of paper forms to IRS for any forms filed electronically as this will result in duplicate filing which may result in penalty notices.

The FIRE System can accept multiple files for the same type of return. For example, if a company has several branches issuing Forms 1099-INT, it is not necessary to consolidate all the forms into one transmission. Each file may be sent separately. Do not transmit duplicate data.

Note: Payers are responsible for providing statements to payees as outlined in the 2014 General Instructions for Certain Information Returns.

Sec. 3 What's New For Tax Year 2014

The guidance provided in Publication 1220 ceased to be issued as a Revenue Procedure and will be maintained as a continuous living document incorporating record layout and other changes, revisions, and deletions. A continuous living document means this document will incorporate changes as they take effect making this document current throughout the filing season. Updates to Publication 1220 are listed in Exhibit 2, *Publication 1220 Updates*.

1. FIRE Production System is available from January 20, 2015 to Dec 11, 2015.

2. FIRE Test System is available from November 3, 2014, through February 20, 2015. Additionally, the FIRE Test System will be down from 6 p.m. (Eastern) December 12, 2014, through January 4, 2015, for yearly updates.

3. Approval letters will not be issued for original 30-day extension requests to file an information return.

4. **Form 1098, *Mortgage Interest Statement***

   - Payer "A" Record - Mortgage Insurance Premium is no longer reported on Payer "A" Record. Deleted Amount Code 4, Mortgage Insurance Premium, in field positions 28 - 43.

5. **Form 1098-C, *Contributions of Motor Vehicles, Boats, and Airplanes***

   - Payee "B" Record **-** Added Data Element, Odometer Mileage, in field positions 663-722, Special Data Entries.

6. **Form 1099-H*, Health Coverage Tax Credit (HCTC) Advance Payments*** – Form is obsolete. The Health Care tax credit expired December 31, 2013.

7. **Form 1099 INT, *Interest Income***

   - Payer "A" Record **-** Two new amount codes:
     - Amount Code A, Market discount – field positions 163-174 of the Payee "B" record.
     - Amount Code B, Bond Premium – field positions 175-186 of the Payee "B" record.

8. **Form 1099-K**, Payment Card and Third Party Network Transactions:

   - Payer "A" Record - Added Amount Code 2, Card Not Present Transactions, in field positions 67-78 of the Payee "B" record.
   - Payee "B" Record – Add positions 544 named, "Second TIN Notice" (Optional).
   - Payee "B" Record – 545-546 will be blank.

9. **Form 1099-Misc**, *Miscellaneous Income*

   - Payer "A" Record – Deleted Amount Code 9, Foreign Tax Paid (no longer reported).

10. **Form 1099-OID**, *Original Issue Discount,* Payer "A" Record:

    - Deleted Amount Code 9, Foreign Tax Paid (no longer reported).
    - Added Amount Code A, Market Discount, reported in field positions 163-174 of the Payee "B" record.
    - Added Amount Code B, Acquisition Premium, in field positions 175-186 of the Payee "B" record.

11. **Form 8935**, *Airline Payments Report* – Made historical in tax year 2014.

12. **Combined Federal/State Filing Program** – Removed Iowa from the program.

    - Payee "B" Record - Removed State Code 19 from field positions 747-748.
    - State Total "K" Record - Removed State Code 19 from field positions 747-748.

13. **Form 1099-R, *Distributions From Pensions, Annuities, Retirement or Profit-Sharing Plans, IRAs, Insurance Contracts, etc*.**

    - Payee "B" Record – Add Code K, Distribution of IRA assets not having a readily available FMV. Code is valid with 1, 2, 4, 7, 8, or G. Optional reporting for TY2014/PY2015.

14. **Form 5498, *IRA Contribution Information***

- Payer "A" Record – Added new Amount Code 7, FMV of Certain Specified Assets, in field positions 127-138 of the Payee "B" record.

  Note: Optional reporting for TY2014/PY2015.

- Payee "B" Record – Add positions 574-575 named “Codes”. Equal to one alpha character or two alpha characters or blank. Valid characters are:
  - Two character combinations can consist of A, B, C, D,E, F, and G.
  - Valid character H cannot be present with any other character.

  Note: Optional reporting for TY2014/PY2015.

15. **Form 1099-B, Proceeds From Broker and Barter Exchange Transactions**

- Payer “A” Record
  - Field positions 28-43, Amount Code 2, renamed to “Proceeds”. Previously named, “Stocks, bonds, etc." (For forward contracts).
  - Field positions 28-43, Amount Code 5 renamed to “Adjustment”. Previously named, “Wash sale loss disallowed”.

16. **Form 1099-B, Proceeds From Broker and Barter Exchange Transactions - Payee “B” Record**

- Field Positions 548-555, Renamed to “Date sold or disposed”. Previously named, “Date of Sale or Exchange”.
- Field Positions 569-607, Renamed to “Description of property”. Previously named, “Description”.
- Field Positions 608-615, Renamed to “Date Acquired”. Previously named, “Date of Acquisition”.
- Remove Field Positions 617-629, “Quantity Sold”.
- Remove Field Positions 630-642, “Stock or Other Symbol”.
- Added Data Element, “Applicable check box of Form 8949”, field position 617:
  - A - short-term transaction for which the cost or other basis is being reported to the IRS.
  - B - short-term transaction for which the cost or other basis is not being reported to the IRS.
  - D - long-term transaction for which the cost or other basis is being reported to the IRS.
  - E - long-term transaction for which the cost or other basis is not being reported to the IRS.
  - X - transaction if you cannot determine whether the recipient should check Box B or Box E on Form 8949 because the holding period is unknown.
- Add Data Element "Code, if any," field position 618. May be blank filled:
  - W - Wash
  - C - Collectibles
  - D - Market discount

17. **New password security requirements for the FIRE System**
    Passwords must be 8-20 characters and include at least one uppercase and one lowercase letter, one number, and one special character #?!@$%^&*.,’-. Passwords cannot contain the User ID or User Name. Passwords must be changed every 90 days. The previous 24 passwords cannot be used. The effective dates for the new Password requirements are:

- November 3, 2014 FIRE Test System
- January 20, 2015 FIRE Production System

Sec. 4 Communicating with the IRS

Assistance is available year-round, Monday through Friday, to payers, transmitters, and employers for the following issues:

- Questions from the payer and transmitter community relating to the correct preparation and filing (electronic or paper) of business information returns (Forms 1096, 1097, 1098, 1099, 3921, 3922, 5498, 8027, 8596, and W-2G).
- Questions related to electronic filling of Form 1042-S, *Foreign Person's U.S. Source Income Subject to Withholding,* and Form 8955-SSA, *Annual Registration Statement Identifying Separated Participants with Deferred Vested Benefits.*
- General Instructions for Forms W-2, *Wage and Tax Statement,* and W-3, *Transmittal of Wage and Tax Statements.*
- Notice CP2100, *Please Check Your Backup Withholding List.*
- Notice 972CG, *A Penalty is Proposed for Your Information Returns.*

Contact the IRS
1-866-455-7438
1-304-263-8700 (International)
1-304-579-4827 for Telecommunications Device for the Deaf (TDD)

The IRS address for filing information returns electronically is https://fire.irs.gov. The address to send a test file electronically is https://fire.test.irs.gov.

To address questions on electronic filing information returns, you may send an email to mccirp@irs.gov. When sending emails concerning specific file information, include the company name and the electronic filename or Transmitter Control Code (TCC). Do not include Tax Identification Numbers (TINs) or attachments in email correspondence because electronic mail is not secure.

You can also mail general inquiries regarding the filing of information returns and your comments/suggestions regarding this publication to:

Internal Revenue Service
230 Murall Drive, Mail Stop 4360
Kearneysville, WV 25430

Sec. 5 Additional Resources

Following are additional resources and information available for information returns:

Topic	Location
Electronic filing of Forms W-2	• Social Security Administration (SSA) website at http://www.ssa.gov/employer/ or call 1-800-772-6270 to obtain the number of the SSA Employer Service Liaison Officer for your area.
Forms and Publications	• Obtain IRS publications and tax forms by going to Forms & Pubs on http://www.irs.gov or by calling toll free 1-800-829-3676.
Form 4419, *Application for Filing Information Returns Electronically (FIRE)*	• Can be applied for online by going to https://fire.irs.gov/ and selecting Fill-In Form 4419 from the Menu Options. • Go to http://www.irs.gov and select Forms & Pubs.
Form 8508, *Request for Waiver From Filing Information Returns Electronically*	• Go to http://www.irs.gov and select Forms & Pubs.

Form 8809, *Application for Extension of Time to File Information Returns*	• Can be requested online by going to https://fire.irs.gov/. After logging in, select "Extension of Time Request" from the Menu Options. • Go to http://www.irs.gov and select Forms & Pubs.
Internal Revenue Bulletin (IRB) – The authoritative instrument for the distribution of all types of official IRS tax guidance; a weekly collection of these and other items of general interest to the tax professional community.	You can find the Internal Revenue Bulletin at http://www.irs.gov/irb/.
Filing Information Returns Electronically on irs.gov – Provides information on filing information returns electronically including transmissions, file preparation, file naming, file status, testing and more.	Go to http://www.irs.gov and search for "Filing Information Returns Electronically".
Mailing address for paper filing of information returns	Go to http://www.irs.gov and click on Forms & Pubs. Click Current or Prior Year Forms & Pubs and enter "Form 1096" in Find box. Click Find. Refer to General Instructions under Where To File for the mailing address.
Payee/recipient questions on how to report information return data	Call 1-800-829-1040 for individual tax return information.
Quick Alerts	Go to http://www.irs.gov. In search box type "Quick Alerts"; select "Subscribe To Quick Alerts".

Sec. 6 Filing Requirements, Retention Requirements, and Due Dates

.01 Filing Requirements

For instructions regarding Forms 1097, 1098, 1099, 3921, 3922, 5498, and W-2G, refer to the general instructions. These instructions include additional information about filing requirements, paper filing, and line instructions.

Filers of Forms 1097, 1098, 1099, 3921, 3922, 5498, and W-2G, may be required to file electronically. Treasury Regulation section 301.6011-2 provides that any person, including a corporation, partnership, individual, estate, or trust, who is required to file 250 or more information returns, must file such returns electronically. The 250 or more requirement applies separately for each type of return and separately to each type of corrected return. If you are required to file electronically, and this requirement causes an undue hardship, see Part A, Sec. 8, Form 8508, *Request for Waiver from Filing Information Returns Electronically.*

Note: All filers are encouraged to file information returns electronically even if they are not required to do so.

All filing requirements apply individually to each reporting entity as defined by its separate TIN. For example, if a corporation with several branches or locations uses the same Employer Identification Number (EIN), the corporation must aggregate the total volume of returns to be filed for that EIN and apply the filing requirements to each type of return accordingly.

.02 Retention Requirements

Payers should retain a copy of information returns (or have the ability to reconstruct the data) for at least three years from the reporting due date with the following exceptions:

- Returns reporting federal withholding should be retained for four years.
- Retain a copy of Form 1099-C, *Cancellation of Debt*, for at least four years from the due date of the return.

.03 Due Dates

Form(s) 1097, 1098, 1099, 3921, 3922, and W-2G are filed on a calendar year basis. Form 5498, *IRA Contribution Information*, is used to report amounts contributed during or after the calendar year (but no later than April 15).

Due Dates		
Form	**IRS Electronic Filing**	**Recipient/Participant Copy**
1097	March 31	On or before the 15th day of the 2nd calendar month after the close of the calendar quarter (on or before May 15; August 15; November 15; February 15 of the following year).
1098	March 31	January 31
1099	March 31	January 31 February 15 for Form 1099-B, 1099-S and 1099-Misc (if amounts are reported in boxes 8 or 14). This also applies to statements furnished as part of a consolidated reporting statement.
3921	March 31	January 31
3922	March 31	January 31
5498	May 31	January 31 – for FMV/RMD May 31 – for contributions
5498-SA	May 31	May 31
5498-ESA	May 31	April 30
W-2G	March 31	January 31
Note: If any due date falls on a Saturday, Sunday, or legal holiday, the return or statement is considered timely if filed or furnished on the next business day.		

Sec. 7 Extensions

A 30-day extension of time to file information returns may be submitted by creating and transferring an electronic file or fill-in form on the FIRE Production System, or submitting a paper Form 8809.

An additional 30-day extension of time to file information returns may be requested if the first automatic 30-day extension was granted and the additional extension is filed before the expiration of the automatic 30-day extension.

Requests for an Extension of Time for Recipient Copies of Information Returns may be submitted on correspondence or electronic file.

For additional information, refer to Part D, *Extension of Time.*

Sec. 8 Form 8508, *Request for Waiver from Filing Information Returns Electronically*

If an employer is required to file original or corrected returns electronically, but the requirement creates an undue hardship, a waiver may be requested by filing Form 8508, *Request for Waiver from Filing Information Returns Electronically*, to the IRS. Note: Form 8508 is also filed with the IRS for a waiver from filing series W-2 forms electronically. Transmitters must file a separate Form 8508 for each payer. Do not submit a list of payers. If a waiver for an original filing is approved, any corrections for the same type of returns will be covered under that waiver.

Filers are encouraged to file Form 8508 with the IRS at least 45 days before the due date of the returns, but no later than the due date of the returns for which the waiver is being requested. The IRS does not process waiver requests until January 1st of the calendar year the returns are due.

Waivers are evaluated on a case-by-case basis and are approved or denied based on criteria set forth in the regulations under Treasury Regulation Section 301.6011-2(2). The transmitter must allow a minimum of 30 days for the IRS to respond to a waiver request.

An approved waiver will provide exemption from electronic filing for the current tax year only and employers may not apply for a waiver for more than one tax year. A waiver does not provide exemption from filing. If a waiver is approved, the filer/payer must timely file all information returns on acceptable paper forms with the IRS.

If a waiver request is approved, keep the approval letter on file. Do not send a copy of the approved waiver to the service center where the paper returns are filed. An approved waiver only applies to the requirement for filing information returns electronically. The payer must still timely file information returns with the appropriate service center on the official IRS paper forms or an acceptable substitute form. Mail completed Form 8508 to:

Internal Revenue Service
Attn: Extension of Time Coordinator
240 Murall Drive, Mail Stop 4360
Kearneysville, WV 25430

Sec. 9 Penalties Associated with Information Returns

Penalties generally apply to the payer required to file information returns. If you fail to file a corrected information return by the due date you may be subject to a penalty. The penalty may apply if the information return:

- was not filed timely
- is missing required information
- contains incorrect information
- was filed on paper when electronic filing is required
- is not machine readable

The amount of the penalty is based on when you file the correct information return:

- **$30** per information return if you correctly file within 30 days of the due date of the return; maximum penalty $250,000 per year for large businesses ($75,000 for small businesses).
- **$60** per information return if you correctly file more than 30 days after the due date but by August 1; maximum penalty $500,000 per year for large businesses ($200,000 for small businesses).
- **$100** per information return if you correctly file after August 1 or you do not file required information returns; maximum penalty $1.5 million per year for large businesses ($500,000 for small businesses).

A late filing penalty may be assessed for a replacement file which is not transmitted by the required date. If a file is submitted timely, but is “bad,” the filer has up to 60 days from the day the file was transmitted to submit an acceptable replacement file. If an acceptable replacement file is not received within 60 days, the payer could be subject to late filing penalties. This only applies to files originally submitted electronically.

If failure to file a correct information return is due to intentional disregard of the filing requirements or correct information requirements, the penalty is at least $250 per information return with no maximum penalty.

For information regarding penalties, which may apply to Failure to Furnish Correct Recipient Statements, see the Penalties Section of the 2014 General Instructions for Certain Information Returns (Forms 1097, 1098, 1099, 3921, 3922, 5498, and W-2G)

Sec. 10 Corrected Returns

.01 General Information

If an information return was successfully processed by the IRS and you identify an error with the file after the IRS accepted the file and it is in "Good, Released" status, you need to file a corrected return. Do not file the original file again, this may result in duplicate reporting. File only those returns that require corrections. Do not code information returns omitted from the original file as corrections.

If you omitted an information return, it should be filed as an original return. The standard correction process will not resolve duplicate reporting. All fields of the corrected return must be complete.

Treasury Regulation 301.6011-2 requires filers who are required to file 250 or more information returns for any calendar year to file the returns electronically. The 250 or more requirement applies separately for each type of form filed and separately for original and corrected returns. Example: If a payer has 100 Forms 1099-A to correct, the returns can be filed on paper because they fall under the 250 threshold. However, if the payer has 300 Forms 1099-B to correct, they must be filed electronically.

The filer or transmitter must furnish corrected statements to recipients as soon as possible. If a filer or transmitter discovers errors that affect a large number of recipients, contact the IRS at 1-866-455-7438. Send corrected returns to the IRS and notify the recipients.

If correct returns are not filed electronically, they must be filed on official forms. For information on substitute forms refer to Publication 1179, *General Rules and Specifications for Substitute Forms 1096, 1098, 1099, 5498, and Certain Other Information Returns.*

In general, corrections for returns should be submitted for returns filed within the last three calendar years with the following exceptions:

- Backup withholding under section 3406 of the Code was imposed – four calendar years
- Form 1099-C, *Cancellation of Debt,* four calendar years

.02 Error in Reporting the Payer

If an error is discovered in reporting the payer (not recipient) name and/or TIN, the payer should write a letter to the IRS containing the following information:

- Name and address of payer
- Type of error (include the incorrect payer name/TIN that was reported)
- Tax year
- Correct Payer TIN
- TCC
- Type of return
- Number of payees
- Filing method, paper or electronic
- Whether Federal income tax is withheld

Mail correspondence to:

Internal Revenue Service
230 Murall Drive, Mail Stop 4360
Kearneysville, WV 25430

.03 Specifications for Filing Corrected Returns Electronically

The record sequence for filing corrections is the same as for original returns. Refer to Part C, Record Format Specifications and Record Layouts, for more information. Corrected returns may be included in the same transmission as original returns; however, separate “A” Records are required.

The “B” Record provides a 20-character field for a unique Payer’s Account Number for payees. The account number is required if there are multiple accounts for a recipient for whom more than one information return of the same type is being filed. This number will identify the appropriate incorrect return if more than one return is filed for a particular payee. Do not enter a TIN in this field. A payer’s account number for the payee may be a checking account number, savings account number, serial number, or any other number assigned to the payee by the payer that will distinguish the specific account. This number must appear on the initial return and on the corrected return for the IRS to identify and process the correction properly.

Review the chart that follows. Errors normally fall under one of the two categories listed. Next to each type of error is a list of instructions on how to file the corrected return.

All corrections properly coded for the CF/SF will be made available to the participating states. Only send corrections, which affect the federal reporting or affect federal and state reporting. Errors which apply only to a state filing requirement should be sent directly to the state.

.04 Corrections and Penalties

Corrections should be filed as soon as possible. Corrections filed after August 1 may be subject to the maximum penalty of $100 per return. Corrections filed by August 1 may be subject to a lesser penalty. However, if payers discover errors after August 1, they should file corrections. A timely filed correction is a factor considered in determining whether the intentional disregard penalty should be assessed or whether a waiver of the penalty for reasonable cause may be granted. All fields must be completed with the correct information, not just the data field needing correction. Submit corrections only for the returns filed in error, not the entire file. Furnish corrected statements to recipients as soon as possible.

.05 Corrected Returns Procedures

There are numerous types of errors, and in some cases, more than one transaction may be required to correct the initial error. Review the "One-Transaction Correction" and "Two-Transaction Correction" tables below before transmitting a corrected file.

One-Transaction Correction	
If … The original return was filed with one or more of the following error types:	Then … Follow the steps below for One-Transaction Correction:
a. Incorrect payment amount codes in the Payer "A" Record. b. Incorrect payment amounts in the Payee "B" Record. c. Incorrect code in the distribution code field in the Payee "B" Record. d. Incorrect payee indicator. (Payee indicators are non-money amount indicator fields located in the specific form record layouts of the Payee "B" Record between field positions 544-748.) e. Return should not have been filed. **Note**: To correct a TIN, and/or payee name follow the instructions under Two-Transaction Correction.	1. Prepare a new file. The first record on the file will be the Transmitter "T" Record. 2. Make a separate "A" Record for each type of return and each payer being reported. Payer information in the "A" Record must be the same as it was in the original submission. 3. The Payee "B" Records must show the correct record information as well as a Corrected Return Indicator Code of "G" in field position 6. 4. Corrected returns using "G" coded "B" Records may be on the same file as Original returns; however, separate "A" Records are required. 5. Prepare a separate "C" Record for each type of return and each payer being reported. 6. The last record on the file must be the End of Transmission "F" Record.

Sample File layout for One-Transaction Corrections

Transmitter "T" Record	Payer "A" Record	"G" coded Payee "B" Record	"G" coded Payee "B" Record	End of Payer "C" Record	End of Transmission "F" Record

Two separate transactions are required to submit a Two-Transaction Correction. You must follow the directions for both transactions.

Note: Do not use this correction process for money amount corrections.

Two-Transaction Correction	
If … The Original return was filed with one or more of the following error types:	Then … Follow the steps below for Two-Transaction Correction:
a. No payee TIN (SSN, EIN, ITIN, QI-EIN, ATIN) b. Incorrect payee TIN c. Incorrect payee name d. Wrong Type of Return Indicator	Transaction 1: 1. Prepare a new file. The first record on the file will be the Transmitter “T” Record. 2. Make a separate “A” Record for each type of return and each payer being reported. The information in the “A” Record will be exactly the same as it was in the original submission. (See Note below). 3. The Payee “B” Records must contain exactly the same information as submitted previously, except, insert a Corrected Return indicator Code of “G” in field position 6 of the “B” Records, and enter “0” (zeros) in all payment amounts. (See Note below.) 4. Corrected returns using “G” coded “B” Records may be on the same file as those returns filed with a “C” code; however, separate “A” Records are required. 5. Prepare a separate “C” Record for each type of return and each payer being reported. **Note:** Although the “A” and “B” Records will be exactly the same as the original submission, the Record Sequence Number will be different because this is a counter number and is unique to each file. For Form 1099-R corrections, if the amounts are zeros, certain indicators will not be used.

Two-Transaction Correction, Continued	
If . . . The original return was filed with one or more of the following errors:	Then . . . Follow the steps below for Two-Transaction Correction:
a. No payee TIN (SSN, EIN, ITIN, QI-EIN, ATIN) b. Incorrect payee TIN c. Incorrect payee name d. Wrong Type of Return Indicator	Transaction 2: 1. Make a separate “A” Record for each type of return and each payer being reported. 2. The Payee “B” Records must show the correct information as well as a Corrected Return Indicator Code of “C” in field position 6. Corrected returns filed with the IRS using “C” coded “B” Records may be on the same file as those returns submitted with “G” codes; however, separate “A” Records are required. 3. Prepare a separate “C” Record for each type of return and each payer being reported. 4. The last record on the file must be the End of Transmission “F” Record.

Sample File layout for Two Transaction Corrections

Transmitter “T” Record	Payer “A” Record	“G” coded Payee “B” Record	“G” coded Payee “B” Record	End of Payer “C” Record	Payer “A” Record

“C” coded Payee “B” Record	“C” coded Payee “B” Record	End of Payer “C” Record	End of Transmission “F” Record

Note: If a filer is reporting “G” coded, “C” coded, and/or “Non-coded” (original) returns on the same file, each category must be reported under separate “A” Records. Although the "A" Record will be exactly the same as the original submission, the Record Sequence Number may be different because this is a counter number and is unique to each file. For Form 1099-R corrections, if the amounts are zeros, certain indicators will not be used.

Sec. 11 Combined Federal/State Filing Program

.01 General

The Combined Federal/State Filing Program (CF/SF) was established to simplify information returns filing for payers. Through CF/SF, the IRS electronically forwards information returns (original and corrected) to participating states.

The following information returns may be filed under the CF/SF:

- Form 1099-B, *Proceeds from Broker and Barter Exchange Transactions*
- Form 1099-DIV, *Dividends and Distributions*
- Form 1099-G, *Certain Government Payments*
- Form 1099-INT, *Interest Income*
- Form 1099-K, *Payment Card and Third Party Network Transactions*
- Form 1099-MISC, *Miscellaneous Income*
- Form 1099-OID. *Original Issue Discount*
- Form 1099-PATR, *Taxable Distributions Received From Cooperatives*
- Form 1099-R, *Distributions From Pensions, Annuities, Retirement or Profit-Sharing Plans, IRAs, Insurance Contracts, etc.*
- Form 5498, *IRA Contribution Information*

.02 Testing

To request approval to participate, an electronic test file coded for this program must be submitted to the FIRE Test System at https://fire.test.irs.gov between November 3, 2014, and February 20, 2015. If the test file is acceptable, an approval letter will be sent. There is no charge to use CF/SF for approved participants.

A test file is only required for the first year a filer participates in the program; however, it is highly recommended that a test file be submitted every year. Records in the test and actual file must conform to current procedures.

Within two business days, the results of the electronic transmission(s) will be sent to the email address that was provided on the "Verify Your Filing Information" page in the FIRE Test System. If using email-filtering software, configure the software to accept email from fire@irs.gov and irs.e-helpmail@irs.gov.

If the file is bad, the filer or transmitter must return to https://fire.test.irs.gov and select "Check File Status" to determine what errors are in the file. See Part B, Sec. 3, *Connecting to Fire.* If the test file was unacceptable, a new test file can be transmitted no later than February 20, 2015.

If a payee has a reporting requirement for more than one state, separate "B" Records must be created for each state. Payers must prorate the amounts to determine what should be reported to each state. Do not report the total amount to each state.

Some participating states require separate notification that the payer is filing in this manner. The IRS acts as a forwarding agent only. It is the payer's responsibility to contact the appropriate state(s) for further information.

Participating states and corresponding valid state codes are listed below in Table 1, *Participating States and Codes*. The appropriate state code must be entered in fields requesting a CF/SF code. Do not use state abbreviations.

Each state's filing requirements are subject to change by the state. It is the payer's responsibility to contact the participating state(s) to verify their criteria.

Upon submission of the files, the transmitter must be sure of the following:

1. All records are accurate.
2. State Total "K" Record(s) for each state(s) being reported follows the "C" Record.
3. Payment amount totals and the valid participating state code are included in the State Totals "K" Record(s).
4. The last "K" Record is followed by an "A" Record (if there are more payers to report) or an End of Transmission "F" Record (if this is the last record of the entire file).

The following table provides codes for participating states in the CF/SF Program.

Table 1: Participating States and Codes *

State	Code	State	Code	State	Code
Alabama	01	Indiana	18	Nebraska	31
Arizona	04	Kansas	20	New Jersey	34
Arkansas	05	Louisiana	22	New Mexico	35
California	06	Maine	23	North Carolina	37
Colorado	07	Maryland	24	North Dakota	38
Connecticut	08	Massachusetts	25	Ohio	39
Delaware	10	Michigan	26	South Carolina	45
District of Columbia	11	Minnesota	27	Utah	49
Georgia	13	Mississippi	28	Vermont	50
Hawaii	15	Missouri	29	Virginia	51
Idaho	16	Montana	30	Wisconsin	55

*The codes listed only apply to the CF/SF program and may not correspond to state codes of agencies or programs outside of the IRS.

Sample File Layout for Combined Federal/State Filing Program

Transmitter “T” Record	Payer “A” Record coded with 1 in position 6	Payee “B” Record with state code 24 in positions 747-748	Payee “B” Record with state code 06 in positions 747-748	Payee “B” Record, no state code	End of Payer “C” Record

State Total “K” Record for “B” records coded 24. “K” record coded 24 in positions 747-748.	State Total “K” Record for “B” records coded 06. “K” record coded 06 in positions 747-748.	Record End of Transmission “F” Record

Sec. 12 State Abbreviation Codes and APO/FPO Addresses

.01 State Abbreviation Codes

The following state and U.S. territory abbreviations are to be used when developing the state code portion of the address fields. This table provides state and territory abbreviations only, and does not represent those states participating in the CF/SF Program.

Table 2 : State & U.S. Territory Abbreviations

State	Code	State	Code	State	Code
Alabama	AL	Louisiana	LA	Oregon	OR
Alaska	AK	Maine	ME	Pennsylvania	PA
American Samoa	AS	Maryland	MD	Puerto Rico	PR
Arizona	AZ	Massachusetts	MA	Rhode Island	RI
Arkansas	AR	Michigan	MI	South Carolina	SC
California	CA	Minnesota	MN	South Dakota	SD
Colorado	CO	Mississippi	MS	Tennessee	TN
Connecticut	CT	Missouri	MO	Texas	TX
Delaware	DE	Montana	MT	Utah	UT
District of Columbia	DC	Nebraska	NE	Vermont	VT
Florida	FL	Nevada	NV	Virginia	VA
Georgia	GA	New Hampshire	NH	U.S. Virgin Islands	VI
Guam	GU	New Jersey	NJ	Washington	WA
Hawaii	HI	New Mexico	NM	West Virginia	WV
Idaho	ID	New York	NY	Wisconsin	WI
Illinois	IL	North Carolina	NC	Wyoming	WY
Indiana	IN	North Dakota	ND		
Iowa	IA	No. Mariana Islands	MP		
Kansas	KS	Ohio	OH		
Kentucky	KY	Oklahoma	OK		

See Part C. *Record Format Specifications and Record Layouts* for more information on the required formatting for address.

Filers must adhere to the city, state and ZIP Code format for U.S. addresses in the “B” Record. This also includes American Samoa, Guam, the Northern Mariana Islands, Puerto Rico, and the U.S. Virgin Islands.

.02 APO and FPO Addresses

When reporting APO/FPO addresses use the following format:

EXAMPLE:

Recipient Name	PVT Willard J. Doe
Mailing Address	Company F, PSC Box 100
	167 Infantry REGT
Recipient City	APO (or FPO)
Recipient State	AE, AA, or AP*
Recipient ZIP Code	098010100

*AE is the designation for ZIP codes beginning with 090-098, AA for ZIP code 340, and AP for ZIP codes 962-966.

Sec. 13 Definition of Terms

ELEMENT	DESCRIPTION
Correction	A correction is an information return filed by the filer/transmitter to correct an information return that was previously filed and successfully processed by the IRS, but contained erroneous information.
EIN	A nine-digit Employer Identification Number which has been assigned by the IRS to the reporting entity.
Replacement	A replacement is an information return file sent by the filer/transmitter at the request of the IRS because of errors encountered while processing the filer's original file or correction file.
In-house Programmer	An employee or a hired contract programmer.
Payer's Account Number For Payee	Any number assigned by the payer to the payee that can be used by the IRS to distinguish between information returns. • This number must be unique for each information return of the same type for the same payee. Refer to Part C, *Payee"B" Record, Field Positions 21-40*. • If a payee has more than one reporting of the same document type, it is vital that each reporting have a unique account number. For example, if a payer has three separate pension distributions for the same payee and three separate Forms 1099-R are filed, three separate unique account numbers are required. • A payee's account number may be given a unique sequencing number, such as 01, 02 or A, B, etc., to differentiate each reported information return. • Do not use the payee's TIN since this will not make each record unique. This information is critical when corrections are filed. • This number will be provided with the backup withholding notification and may be helpful in identifying the branch or subsidiary reporting the transaction. • The account number can be any combination of alpha, numeric, or special characters.

Part B. Data Communication

Sec. 1 Application for Filing Information Returns Electronically

01. Form 4419, *Application for Filing Information Returns Electronically*

All transmitters who file information returns electronically are required to request authorization to file electronically using Form 4419, *Application for Filing Information Returns Electronically*.

Form 4419 may be completed online at https://fire.irs.gov. At the main menu, select "Fill-in Form 4419". Review the "Important Notes" screen to ensure that you have the correct information to proceed. To complete your submission, you must click the "*Yes, I am authorized to sign this document on behalf of the transmitter*" box to submit the application.

A completed paper form may be mailed or faxed to:

Internal Revenue Service
240 Murall Drive Mail Stop 4360
Kearneysville, WV 25430
Fax: 1-877-477-0572

Transmitters may file Form 4419 throughout the year; however, the application must be filed at least 45 days before the due date of the returns(s) for current year processing.

02. Do I Need More than One TCC?

The Transmitter Control Code is used to catalog files as they are received. The forms listed in Publication 1220 require a single TCC and therefore, only one Form 4419 must be filed. However, an additional TCC is required for each the following types of returns.

- Form 1042-S, *Foreign Person's U.S. Source Income Subject to Withholding*
- Form 8027, *Employer's Annual Information Return of Tip Income and Allocated Tips*
- Form 8955-SSA, *Annual Registration Statement Identifying Separated Participants with Deferred Vested Benefits*

Detailed instructions can be found on Form 4419.

For example, if a transmitter plans to file Forms 1099 INT, Form 4419 should be submitted. If, at a later date, another type of form (Forms 1097, 1098, 1099, 3921, 3922, 5498, and W-2G) will be filed, the TCC assigned to file forms 1099 INT should be used. Do not submit an additional Form 4419.

The IRS encourages transmitters who send information for multiple payers to file one application and to use the assigned TCC for all payers. The TCC only identifies who is sending the file. The information return data will be contained in the file itself. While not encouraged, multiple TCCs can be issued to payers with multiple TINs. Transmitters cannot use more than one TCC in a file. Each TCC must be reported in separate transmissions.

Some service bureaus will transmit files using their TCC, while others will require filers to obtain a TCC of their own. Payers should contact their service bureau for further information.

.03 Application Approval

A five-character alphanumeric Transmitter Control Code (TCC) will be assigned and included in an approval letter that will be mailed to the address listed on the Form 4419 within 45 days. Electronically filed returns may not be transmitted to the IRS until the Form 4419 has been approved.

Form 4419 is subject to review before approval to transmit electronically is granted. The IRS may require additional documentation. The IRS has the authority to revoke the TCC and terminate the release of the transmitted files. Once a transmitter is approved to file electronically, it is not necessary to reapply unless:

- Payer has discontinued filing electronically for two consecutive years.
- Payer's files were transmitted in the past by a service bureau using the service bureau's TCC, but now the payer has computer equipment compatible with that of the IRS and wishes to prepare the files. The payer must request a TCC by submitting Form 4419.

.04 Updating Information on Form 4419

Transmitters should notify the IRS of any application changes in writing. See Part A, Sec. 4, *Communicating with the IRS* for mailing address.

Sec. 2 User ID, Password and PIN Requirements

Before you can transmit files through the FIRE Production System and FIRE Test System (if submitting test files), you must establish an account. The system will prompt you to create your User ID, password, and a 10-digit PIN. The FIRE Production System and the FIRE Test System are two different sites that do not communicate with each other. If you plan on sending a production file and a test file, you will need an account on each system.

You must enter the PIN each time you electronically send an original, corrected, or replacement file. Test files do not require a PIN. Authorized agents or transmitters may enter their PIN; however, the payer/filer is responsible for the accuracy of the returns and will be liable for penalties for failure to comply with filing requirements.

If you are submitting files for more than one TCC, it is not necessary to create a separate User ID and password for each TCC.

Sec. 3 Connecting to FIRE

Connect to the FIRE Production System by accessing https://fire.irs.gov. The FIRE Production System is available from January 20, 2015 to December 11, 2015.

Connect to the FIRE Test System by accessing https://fire.test.irs.gov. FIRE Test System is available from November 3, 2014, through February 20, 2015. The FIRE Test System will be down from 6 p.m. (Eastern) December 12, 2014, through January 4, 2015, for yearly updates. If you intend to transmit a test file, you must create an account in the FIRE Test System.

Follow the table below to connect to the FIRE System.

Connecting to the FIRE System	
1st Time Connection to FIRE Production and FIRE Test Systems	Returning FIRE Production and FIRE Test User
» Click “Create New Account” » Fill out the registration form and click “Submit” » Create User ID » Create and verify password » Click “Create” » If the message “Account Created” is received, click “OK” » Create and verify the 10-digit self-assigned PIN (Personal Identification Number) » Click “Submit” » If the message “Your PIN has been successfully created!” is received, click “OK” » Read the bulletin(s) and/or Click “Continue” Note: The email you provided when creating an account is where all email communications will be sent. If you are using SPAM filtering software, configure it to allow an email from fire@irs.gov and irs.e-helpmail@irs.gov.	» Click “Log On” » Enter the User ID (Not case sensitive) » Enter the Password (Case sensitive) » Read the bulletin(s) and/or select “Continue” Note: FIRE password security requirements have changed. You will be required to create a new password when you log on to the FIRE TEST System for the first time beginning November 3, 2014. You will also be required to create a new password the first time you log on to the FIRE Production System beginning January 20, 2015. The updated password criteria are: » Must contain a minimum of 8 characters » Limited to a maximum of 20 characters » Must contain at least one special character #?!@$%^&*.,’- » Must contain at least one upper case letter (alpha character) » Must contain at least one lower case letter (alpha character) » Must contain at least one number (numeric character) » Passwords must be changed every 90 days; the previous 24 passwords cannot be used » Passwords cannot contain the User ID or User Name

Uploading Files to FIRE

Filers may upload a file to the FIRE System by taking the following actions:

- After logging in, go to the Main Menu
- Select “Send Information Returns”
- Enter the TCC
- Enter the TIN
- “Submit”
- Update company information as appropriate and/or click “Accept” (The system will display the company name, address, city, state, ZIP code, telephone number, contact and email address. This information is used to email the transmitter regarding the transmission)
- Select one of the following:
  - Original File
  - Replacement File
  - Correction File
  - Test File (This option will only be available on the FIRE Test System from November 3 through February 20 at https://fire.test.irs.gov/)
- Enter the ten-digit PIN (If sending a test file, there is no prompt for this.)
- “Submit”
- “Browse” to locate the file and open it
- “Upload”
- Note: When the upload is complete, the screen will display the total bytes received and display the name of the file just uploaded. It is recommended that you print the page for your records. If this page is not displayed on your screen, we probably did not receive the file. To verify, go to Check File Status option on the main menu. If the file name is displayed and the count is equal to ‘0’ and the results indicate “not yet processed,” then we received the file.

Checking the Status of Your File

It is the transmitter’s responsibility to check the status of submitted files. If you do not receive an email within two business days or if you receive an email indicating the file is bad:

- Log back into the FIRE System
- Select “Main Menu”
- Select “Check File Status”
- Enter the TCC
- Enter the TIN
- “Search”

File Status Results:

- **“Good, Not Released”** – The filer is finished with this file if the “Count of Payees” is correct. The file is automatically released after ten calendar days unless the filer contacts the IRS within this timeframe.
- **“Good, Released”** – The file has been released for IRS processing.
- **“Bad”** – The file has errors. Click on the filename to view the error message(s), fix the errors, and resubmit the file timely as a “Replacement” file.
- **“Not Yet Processed”** – The file has been received, but results are not available. Please check back in a few days.

Sec. 4 Electronic Specifications

.01 FIRE System

The FIRE System is designed exclusively for electronic filing of Forms 1042-S, 1097, 1098, 1099, 3921, 3922, 5498, 8027, 8955- SSA and W-2G. Electronic files are transmitted through the FIRE Production System at https://fire.irs.gov/. The electronic filing of information returns is not affiliated with any other IRS electronic filing programs. Filers must obtain separate approval to participate in different programs.

The FIRE Production System does not provide fill-in forms, with the exception of:

- Form 8809, *Application for Extension of Time to File Information Returns*
- Form 4419, *Application for Filing Information Returns Electronically (FIRE)*

The FIRE System can accept multiple files for the same type of return. For example, if a company has several branches issuing Forms 1099-INT, it is not necessary to consolidate all the forms into one transmission. Each file may be sent separately. Do not transmit duplicate data.

Electronic reporting of information returns eliminates the need for electronic filers to send paper documents to the IRS. Do not send copies of the paper forms to the IRS for any forms filed electronically. This will result in duplicate filing.

.02 FIRE System Internet Security Technical Standards

FIRE System Internet Security Technical Standards are:

- HTTP 1.1 Specification http://www.w3.org/Protocols/rfc2616/rfc2616.txt
- SSL 3.0 or TLS 1.0. SSL and TLS are implemented using SHA and RSA 1024 bits during the asymmetric handshake
- The filer can use one of the following encryption algorithms, listed in order of priority using SSL or TLS:
  - AES 256-bit (FIPS-197)
  - AES 128-bit (FIPS-197)
  - TDES 168-bit (FIPS-46-3)

Sec. 5 Electronic Submissions

01. Electronic Submissions

The FIRE System is available for electronic submissions 24 hours daily with the exception of:

- FIRE Production System will be down from 6 p.m. (Eastern) December 12, 2014, through January 19, 2015, for yearly updates.
- FIRE Test System is available from November 3, 2014, through February 20, 2015. The Test System will be down from 6 p.m. (Eastern) December 12, 2014, through January 4, 2015, for yearly updates.
- FIRE Production and FIRE Test Systems may be down every Wednesday from 2:00 a.m. to 5:00 a.m. (Eastern) for programming updates.

Standard ASCII code is required for all files. The file size cannot exceed 2.5 million records. The time required to transmit files varies depending upon your type of connection to the internet.

- When sending electronic files larger than 10,000 records, data compression is encouraged.
- WinZip and PKZIP are the only acceptable compression packages. The IRS cannot accept self-extracting zip files or compressed files containing multiple files.
- The time required to transmit a file can be reduced up to 95 percent by using compression. If you are having trouble transmitting files with a scripting process, please contact the IRS at 1-866-455-7438 for assistance.

Transmitters may create files using self-assigned file name(s). However, the FIRE System will assign a unique filename. Record the FIRE filename from the "Check File Status" page as it is required when assistance is needed. The FIRE filename consists of:

- Submission type. (Original, Correction, Replacement, and Test)
- TCC.
- Four-digit sequence number. The sequence number will be increased for every file sent.

- Example, if this is the first original file for the calendar year and the TCC is 44444, the IRS assigned filename would be ORIG.44444.0001.

Prior year data, original and corrected, must be filed according to the requirements of this publication. When submitting prior year data, use the record format for the current year. Each tax year must be electronically filed in separate transmissions. However, use the actual year designation of the data in field positions 2-5 of the "T", "A", and "B" Records. Field position 6, Prior Year Data Indicator, in the Transmitter "T" Record must contain a "P." A separate transmission must be made for each tax year. See Part C, *Record Format Specifications and Record Layout.*

.02 File Definitions

It is important to distinguish between the specific types of files:

Original File – Contains information returns that have not been previously reported to the IRS.

Correction File – Contains information returns that were previously submitted and processed but were found to contain incorrect information. Correction files should only contain records that require a correction, not the entire file.

Replacement File – A replacement file is sent when a "Bad" status is received. After the necessary changes have been made, transmit the entire file through the FIRE Production System as a replacement file.

Test File – Contains data (ficticious or real) that is formatted to the specifications in the Publication 1220 and can only be sent through the FIRE Test System at https://fire.test.irs.gov/.

.03 Submission Responses

The results of your electronic transmission(s) will be sent to the email address that was provided on the "Verify Your Filing Information" screen within two days after a file has been submitted. If using email filtering software, configure software to accept email from fire@irs.gov and irs.e-helpmail@irs.gov.

If a file is bad, the transmitter must return to https://fire.irs.gov/ or https://fire.test.irs.gov/ to identify the errors. At the main menu select, *Check File Status.*

It is the filer's responsibility to check the status of the file. If a timely-filed electronic file is bad, the filer will have up to 60 days from the day the file was transmitted to submit an acceptable replacement file. If an acceptable replacement file is not received within 60 days, the payer could be subject to late filing penalties. Note: The timeframe only applies to files originally filed electronically.

If the file is good, it is released for mainline processing after ten calendar days from receipt. Contact the IRS within the ten-day timeframe to stop processing.

Sec. 6 Test Files

A test file is not required unless participating in the CF/SF program for the first year. However, the submission of a test file is encouraged for all new electronic filers to test hardware and software. Generally, testing is available between November and February. See Part B, Sec. 3, *Connecting to FIRE*.

The test file must consist of a sample of each type of record:

- Transmitter "T" Record
- Use the Test Indicator "T" in field position 28 on the "T" Record
- Payer "A" Record
- Multiple Payee "B" Records (at least eleven "B" Records per each "A" Record)
- End of Payer "C" Record
- State Totals "K" Record(s) - if participating in the CF/SF
- End of Transmission "F" Record

Note: See Part C, *Record Format Specifications and Record Layout*, for record formats.

The IRS will check the file to ensure it meets the specifications outlined in this publication. Current filers may send a test file to ensure the software reflects all required programming changes; however not all validity, consistency, or math error tests will be conducted.

Provide a valid email address on the "Verify Your Filing Information" page. You will be notified of your file acceptance by email within two days of transmission. When using email filtering software, configure software to accept email from fire@irs.gov and irs.e-helpmail@irs.gov.

It is the transmitter's responsibility to check the results of the submission. See Part B, Sec. 3, *Connecting to Fire*.

The following results will be displayed:

- *"Good, Federal Reporting"* – The test file is good for federal reporting.
- *"Good, Federal/State Reporting"- The file is good for the CF/SF.*
- *"Bad"* – The test file contains errors. Click on the filename for a list of the errors.
- *"Not Yet Processed"* - The file has been received, but results are not available. Please check back in a few days.

Sec. 7 Common Problems

Item	Issue	Resolution
1	You have not received a file status email.	To receive emails concerning files, processing results, reminders and notices, set the SPAM filter to receive email from fire@irs.gov and irs.e-helpmail@irs.gov. Check File Status to ensure that your information was transmitted. Check "Verify Your Filing Information" page in your FIRE account to ensure the correct email address is displayed.
2	You do not know the status of your submission	Generally, the results of file are posted to the FIRE System within two business days. If the correct email address was provided on the "Verify Your Filing Information" screen when the file was uploaded, an email will be sent regarding the FILE STATUS. If the results in the email indicate "Good, Not Released" and the "Count of Payees" is correct, the filer is finished with this file. If any other results are received, follow the instructions in the "Check File Status" option. If the file contains errors, get an online listing of the errors. If the file status is good, but the file should not be processed, filers should contact the IRS within ten calendar days from the transmission of the file.
3	You received a file status of "Bad"	If a file is bad, make necessary changes and resubmit timely as a replacement. If a timely-filed transmission is "Bad", you have 60 days to send a good replacement.
4	You received an error that more than one file is compressed within the file.	Only compress one file at a time. For example, if there are ten uncompressed files to send, compress each file separately and send ten separate compressed files.
5	You resent your entire file as a Correction after only a few changes were made.	Only send those returns that need corrections; not the entire file. See Part A, Sec. 10, *Corrected Returns*

6	You received an error that the file is formatted as EBCDIC.	All files submitted electronically must be in standard ASCII code.
7	You receive a TCC/TIN mismatch error when entering your TCC/TIN combination in your FIRE System account.	Enter the TIN of the company assigned to the TCC.
8	Transmitter sent the wrong file.	Call the IRS at 1-866-455-7438. The IRS may be able to stop the file before it has been processed.
9	You send a file that is in the "Good/Not Released Status" and you want to send a different file in place of the previous one.	Contact the IRS at 1-866-455-7438 to learn of your options. The IRS may be able to close the file or change the status to "Bad".
10	You sent a file in PDF format	All files submitted electronically must be in standard ASCII code. If you have software that is supposed to produce this file, you may want to contact the software company to see if their software has the ability to produce a file in the proper format.

Sec. 8 Common Formatting Errors

Item	Issue	Resolution
1	"C" Record contains Control Totals that do not equal the IRS total of "B" Records.	The “C” Record is a summary record for a type of return for a given payer. The IRS compares the total number of payees and payment amounts in the “B” Records with totals in the “C” Records. The two totals must agree. Do not enter negative amounts except when reporting Forms 1099-B or 1099-Q. Money amounts must be numeric and right justified. Unused positions must be zero (0) filled. Do not use blanks in money amount fields.
2	You identified your file as a correction; however, the data is not coded with a "G" or "C" in position 6.	When a file is submitted as a correction file, there must be a correction indicator “G” or “C” in position 6 of the Payee “B” record. See Part A, Sec. 10, *Corrected Returns.*
3	"A" Record contains missing or invalid TIN in positions 12-20.	The Payer’s TIN reported in positions 12-20 of the “A” Record must be a nine-digit number. Do not enter hyphens. The TIN and the First Payer Name Line provided in the “A” Record must correspond.

4	"T" Record, "A" Record and/or "B" Record appear(s) to have an incorrect tax year in positions 2-5.	The tax year in the transmitter, payer, and payee records must reflect the tax year of the information return being reported. For prior tax year data, there must be a “P” in position 6 of the Transmitter “T” Record. This position must be blank for current year.
5	“T” Record has a “T” (for Test) in position 28; however, your file was not sent as a test.	Remove the "T" from position 28 on the "T" record and resubmit as a replacement. CAUTION: Do not remove the “T” from position 1 of the “T” Record, only from position 28.
6	A percentage of your “B” Records contain missing and/or invalid TIN.	TINs entered in positions 12-20 of the Payee “B” records must consist of 9 numeric characters only. Do not enter hyphens. Incorrect formatting of TINs may result in a penalty.
7	Percentage of your Form 1099-R “B” Records contain invalid or missing distribution codes.	For Form 1099-R, there must be a valid Distribution Code(s) in positions 545-546 of the Payee “B” Record(s). For valid codes (and combinations), refer to the chart in Part C. If only one distribution code is required, it must be entered in position 545 and position 546 must be blank. A blank in position 545 is not acceptable.
8	"A” Record has an incorrect/invalid type of return and/or amount code(s) in positions 26-43.	The Amount Codes used in the “A” Record must correspond with the payment amount fields used in the “B” Record(s). The Amount Codes must be left justified and in ascending order. Unused positions must be blank filled. For Example: If the “B” Record(s) show payment amounts in Payment Amount fields 2, 4, and 7, then the “A” Record must correspond with 2, 4, and 7 in the Amount Code fields.

Part C. Record Format Specifications and Record Layouts

File Format

Each record must be 750 positions.

"T" Record

Identifies the Transmitter of electronic file.

"A" Record

Identifies the Payer (the institution or person making payments) the type of document being reported, and other miscellaneous information.

"B" Record

Identifies the Payee, the specific payment amounts and information pertinent to the form.

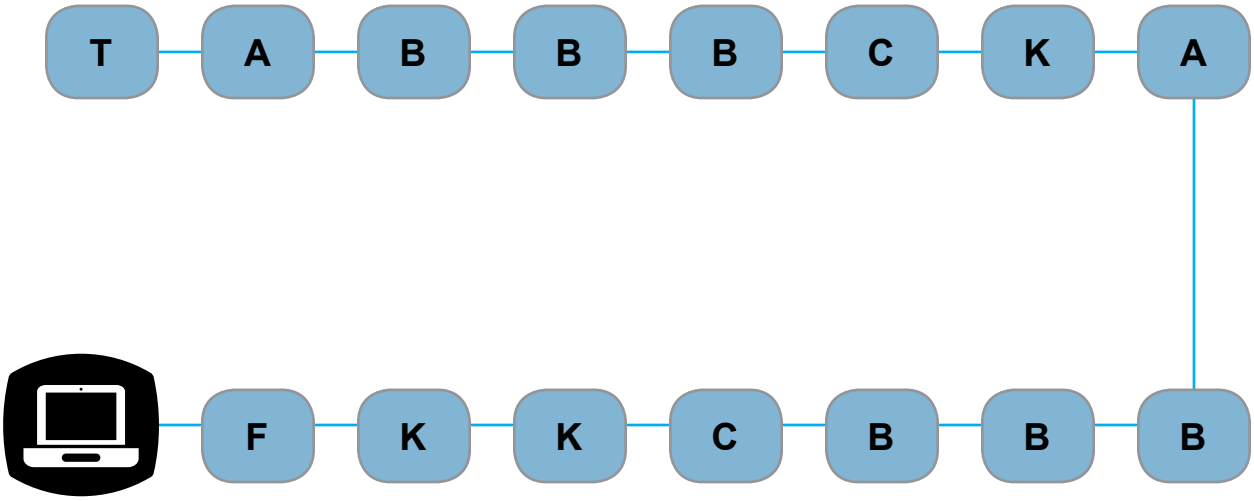

"F" Record

End of Transmission

"K" Record

Summary of State(s) Totals (for CF/SF). Each state will have a separate “K” Record.

"C" Record

Summary of Payee “B” Records and money amounts for each payer per type of return.

Sec. 1 Transmitter "T" Record

General Field Descriptions

The Transmitter "T" Record identifies the entity transmitting the electronic file. A replacement file will be requested if the "T" Record is not present. See File Format Diagram located in Part C, *Record Format Specifications and Record Layouts.*

- Transmitter "T" Record is the first record on each file and is followed by a Payer "A" Record.
- All records must be a fixed length of 750 positions.
- Do not use punctuation in the name and address fields.
- The Transmitter "T" Record contains critical information if it is necessary for the IRS to contact the transmitter.
- For all fields marked "Required," the transmitter must provide the information described under General Field Description. For those fields not marked "Required," a transmitter must allow for the field but may be instructed to enter blanks or zeros in the indicated field positions and for the indicated length.
- All alpha characters entered in the "T" Record must be upper case, except an email address which may be case sensitive.

Record Name: Transmitter "T" Record			
Field Position	**Field Title**	**Length**	**General Field Description**
1	Record Type	1	**Required**. Enter "T."
2-5	Payment Year	4	**Required**. Enter "2014." If reporting prior year data report the year which applies (2013, 2012, etc.) and set the Prior Year Data Indicator in field position 6.
6	Prior Year Data Indicator	1	**Required**. Enter "P" only if reporting prior year data; otherwise, enter a blank. Do not enter a "P" if the tax year is 2014.
7-15	Transmitter's TIN	9	**Required**. Enter the transmitter's nine-digit Taxpayer Identification Number (TIN).
16-20	Transmitter Control Code	5	**Required**. Enter the five-character alphanumeric Transmitter Control Code (TCC) assigned by the IRS.
21-27	Blank	7	Enter blanks.
28	Test File Indicator	1	**Required for test files only**. Enter a "T" if this is a test file; otherwise, enter a blank.
29	Foreign Entity Indicator	1	Enter a "1" (one) if the transmitter is a foreign entity. If the transmitter is not a foreign entity, enter a blank.
30-69	Transmitter Name	40	**Required**. Enter the transmitter name. Left justify the information and fill unused positions with blanks.
70-109	Transmitter Name (Continuation)	40	Enter any additional information that may be part of the name. Left justify the information and fill unused positions with blanks.
110-149	Company Name	40	**Required**. Enter company name associated with the address in field positions 190-229.
150-189	Company Name (Continuation)	40	Enter any additional information that may be part of the company name.

Record Name: Transmitter "T" Record			
Field Position	**Field Title**	**Length**	**General Field Description**
190-229	Company Mailing Address	40	**Required**. Enter the mailing address associated with the Company Name in the field positions 110-149 where correspondence should be sent. **For U.S. address**, the payer city, state, and ZIP Code must be reported as a 40-, 2-, and 9- position field, respectively. Filers must adhere to the correct format for the payer city, state, and ZIP Code. **For foreign address**, filers may use the payer city, state, and ZIP Code as a continuous 51-position field. Enter information in the following order: city, province or state, postal code, and the name of the country. When reporting a foreign address, the Foreign Entity Indicator in position 29 must contain a "1" (one).
230-269	Company City	40	**Required**. Enter the city, town, or post office where correspondence should be sent.
270-271	Company State	2	**Required**. Enter U.S. Postal Service state abbreviation. Refer to Part A. Sec. 12, Table 2, *State & U.S. Territory Abbreviations.*
272-280	Company ZIP Code	9	**Required**. Enter the nine-digit ZIP Code assigned by the U.S. Postal Service. If only the first five digits are known, left justify the information and fill unused positions with blanks.
281-295	Blank	15	Enter blanks.
296-303	Total Number of Payees	8	Enter the total number of Payee "B" Records reported in the file. Right justify the information and fill unused positions with zeros.
304-343	Contact Name	40	**Required**. Enter the name of the person to contact when problems with the file or transmission are encountered.
344-358	Contact Telephone Number & Extension	15	**Required**. Enter the telephone number of the person to contact regarding electronic files. Omit hyphens. If no extension is available, left justify the information and fill unused positions with blanks. Example: The IRS telephone number of 866-455-7438 with an extension of 52345 would be 866455743852345.
359-408	Contact Email Address	50	**Required if available**. Enter the email address of the person to contact regarding electronic files. If no email address is available, enter blanks. Left justify.
409-499	Blank	91	Enter blanks.

Record Name: Transmitter "T" Record			
Field Position	**Field Title**	**Length**	**General Field Description**
500-507	Record Sequence Number	8	**Required**. Enter the number of the record as it appears within the file. The record sequence number for the "T" Record will always be one (1), since it is the first record on the file and the file can have only one "T" Record. Each record, thereafter, must be increased by one in ascending numerical sequence, that is, 2, 3, 4, etc. Right justify numbers with leading zeros in the field. For example, the "T" Record sequence number would appear as "00000001" in the field, the first "A" Record would be "00000002," the first "B" Record, "00000003," the second "B" Record, "00000004" and so on through the final record of the file, the "F" Record.
508-517	Blank	10	Enter blanks.
518	Vendor Indicator	1	**Required**. If the software used to produce this file was provided by a vendor or produced in-house, enter the appropriate code from the table below. **Usage** / **Indicator** The software was purchased from a vendor or other source. — V The software was produced by in-house programmers. — I Note: An in-house programmer is defined as an employee or a hired contract programmer. If the software is produced in-house, Vendor Name fields 519-558 are not required.
519-558	Vendor Name	40	**Required**. Enter the name of the company from whom the software was purchased. If the software is produced in-house, enter blanks.
559-598	Vendor Mailing Address	40	**Required**. Enter the mailing address. If the software is produced in-house, enter blanks. **For U.S. address**, the payer city, state, and ZIP Code must be reported as a 40-, 2-, and 9- position field, respectively. Filers must adhere to the correct format for the payer city, state, and ZIP Code. **For foreign address**, filers may use the payer city, state, and ZIP Code as a continuous 51-position field. Enter information in the following order: city, province or state, postal code, and the name of the country. When reporting a foreign address, the Foreign Entity Indicator in position 29 must contain a "1" (one).
599-638	Vendor City	40	**Required**. Enter the city, town, or post office. If the software is produced in-house, enter blanks.
639-640	Vendor State	2	**Required**. Enter U.S. Postal Service state abbreviation. Refer to Part A, Sec. 12, *Table 2 State & U.S. Territory Abbreviations*. If the software is produced in-house, enter blanks.

Record Name: Transmitter "T" Record			
Field Position	**Field Title**	**Length**	**General Field Description**
641-649	Vendor ZIP Code	9	**Required**. Enter the valid nine-digit ZIP Code assigned by the U.S. Postal Service. If only the first five-digits are known, fill unused positions with blanks. Left justify. If the software is produced in-house, enter blanks.
650-689	Vendor Contact Name	40	**Required**. Enter the name of the person to contact concerning software questions. If the software is produced in-house, enter blanks.
690-704	Vendor Contact Telephone Number & Extension	15	**Required**. Enter the telephone number of the person to contact concerning software questions. Omit hyphens. If no extension is available, left justify the information and fill unused positions with blanks. If the software is produced in-house, enter blanks.
705-739	Blank	35	Enter blanks.
740	Vendor Foreign Entity Indicator	1	Enter a "1" (one) if the vendor is a foreign entity. Otherwise, enter a blank.
741-748	Blank	8	Enter blanks.
749-750	Blank	2	Enter blanks or carriage return/line feed characters (CR/LF).

Transmitter "T" Record - Record Layout

Record Type	Payment Year	Prior Year Data Indicator	Transmitter's TIN	Transmitter Control Code	Blank
1	2-5	6	7-15	16-20	21-27
Test File Indicator	Foreign Entity Indicator	Transmitter Name	Transmitter Name (Continuation)	Company Name	Company Name (Continuation)
28	29	30-69	70-109	110-149	150-189
Company Mailing Address	Company City	Company State	Company ZIP Code	Blank	Total Number of Payees
190-229	230-269	270-271	272-280	281-295	296-303
Contact Name	Contact Telephone Number & Extension	Contact Email Address	Blank	Record Sequence Number	Blank
304-343	344-358	359-408	409-499	500-507	508-517
Vendor Indicator	Vendor Name	Vendor Mailing Address	Vendor City	Vendor State	Vendor ZIP Code
518	519-558	559-598	599-638	639-640	641-649
Vendor Contact Name	Vendor Contact Telephone Number & Extension	Blank	Vendor Foreign Entity Indicator	Blank	Blank or CR/LF
650-689	690-704	705-739	740	741-748	749-750

Sec. 2 Payer "A" Record

General Field Descriptions

The second record on the file must be a Payer "A" Record.

- The Payer "A" Record identifies the person making payments. The payer will be held responsible for the completeness, accuracy, and timely submission of electronic files. Examples of a Payer include:
  - Recipient of mortgage payments
  - Recipient of student loan interest payments
  - Educational institution
  - Broker
  - Person reporting a real estate transaction
  - Barter exchange
  - Creditor
  - Trustee or issuer of any IRA or MSA plan
  - Lender who acquires an interest in secured property or who has a reason to know that the property has been abandoned.
- A transmitter may include Payee "B" Records for more than one payer in a file; however, each group of "B" Record(s) must be preceded by an "A" Record and followed by an End of Payer "C" Record. A single file may contain different types of returns but the types of returns must not be intermingled. A separate "A" Record is required for each payer and each type of return being reported.
- The number of "A" Records depends on the number of payers and the different types of returns being reported. Do not submit separate "A" Records for each payment amount being reported. For example, if a payer is filing Form 1099-DIV to report Amount Codes 1, 2, and 3, all three amount codes should be reported under one "A" Record, not three separate "A" Records.
- The maximum number of "A" Records allowed on a file is 99,000. All records must be a fixed length of 750 positions. All alpha characters entered in the "A" Record must be upper case.
- For all fields marked "Required," the transmitter must provide the information described under General Field Description. For those fields not marked "Required," a transmitter must allow for the field, but may be instructed to enter blanks or zeros in the indicated field position(s) and for the indicated length.

Record Name: Payer "A" Record			
Field Position	**Field Title**	**Length**	**General Field Description**
1	Record Type	1	**Required**. Enter an "A."
2-5	Payment Year	4	**Required**. Enter "2014." If reporting prior year data, report the year which applies (2013, 2012, etc.).

Record Name: Payer "A" Record			
Field Position	**Field Title**	**Length**	**General Field Description**
6	Combined Federal/ State Filing Program	1	**Required for CF/SF.** Enter "1" (one) if approved and submitting information as part of the CF/SF program or if submitting a test file in order to obtain approval for the CF/SF program; otherwise, enter a blank. **Note 1**: If the Payer "A" Record is coded for the CF/SF there must be coding in the Payee "B" Records and the State Totals "K" Records. **Note 2**: If "1" (one) is entered in this field position, be sure to code the Payee "B" Records with the appropriate state code. Refer to Part A, Sec 11, Table 1, *Participating States and Codes, for further information.*
7-11	Blank	5	Enter blanks.
12-20	Payer's Taxpayer Identification Number (TIN)	9	**Required**. Enter the valid nine-digit Taxpayer Identification Number assigned to the payer. Do not enter blanks, hyphens, or alpha characters. Filling the field with all zeros, ones, twos, etc., will result in an incorrect TIN. **Note**: For foreign entities that are not required to have a TIN, this field must be blank; however, the Foreign Entity Indicator, position 52 of the "A" Record, must be set to one (1).
21-24	Payer Name Control	4	Enter the four characters of the name control or enter blanks. See Part E, *Exhibit 1, Name Control.*
25	Last Filing Indicator	1	Enter a "1" (one) if this is the last year this payer name and TIN will file information returns electronically or on paper; otherwise, enter a blank.

Record Name: Payer "A" Record Payer "A" Record (continued)			
Field Position	**Field Title**	**Length**	**General Field Description**
26-27	Type of Return	2	**Required**. Enter the appropriate code from the table below. Left-justify the information and fill unused positions with blanks.

TYPE OF RETURN	CODE
1097-BTC	BT
1098	3
1098-C	X
1098-E	2
1098-T	8
1099-A	4
1099-B	B
1099-C	5
1099-CAP	P
1099-DIV	1
1099-G	F
1099-INT	6
1099-K	MC
1099-LTC	T
1099-MISC	A
1099-OID	D
1099-PATR	7
1099-Q	Q
1099-R	9
1099-S	S
1099-SA	M
3921	N
3922	Z
5498	L
5498-ESA	V
5498-SA	K
W-2G	W

28-43	Amount Codes	16	**Required**. Enter the appropriate amount; code(s) for the type of return being reported. In most cases, the box numbers on paper information returns correspond with the amount codes used to file electronically. However, if discrepancies occur, Publication 1220 governs for filing electronically. Enter the amount codes in ascending sequence; numeric characters followed by alphas. Left-justify the information and fill unused positions with blanks. **Note**: A type of return and an amount code must be present in every Payer "A" Record even if no money amounts are being reported. For a detailed explanation of the information to be reported in each amount code, refer to the appropriate paper instructions for each form.

Record Name: Payer "A" Record Payer "A" Record (continued)			
Field Position	**Field Title**	**Length**	**General Field Description**

Amount Codes

Form 1097-BTC, *Bond Tax Credit*

For Reporting Payments on Form 1097-BTC:

Amount Type	Amount Code
Total Aggregate	1
January	2
February	3
March	4
April	5
May	6
June	7
July	8
August	9
September	A
October	B
November	C
December	D

Amount Codes

Form 1098, *Mortgage Interest Statement*

For Reporting Payments on Form 1098:

Amount Type	Amount Code
Mortgage interest received from payer(s)/borrower(s)	1
Points paid on the purchase of a principal residence	2
Refund or credit of overpaid interest	3
Blank (Filer's use)	5

Amount Codes

Form 1098-C, *Contributions of Motor Vehicles, Boats, and Airplanes*

For Reporting Payments on Form 1098-C:

Amount Type	Amount Code
Gross proceeds from sales	4
Value of goods or services in exchange for a vehicle	6

Note: If reporting other than "Gross proceeds from sales" or "Value of goods or service in exchange for a vehicle" use Type of Return Code "X" in field positions 26-27 and Amount Code 4 in field position 28 of the "A" Record. All payment amount fields in the payee "B" record will contain zeros.

Amount Code

Form 1098 E, *Student Loan Interest Statement*

For Reporting Payments on Form 1098-E:

Amount Type	Amount Code
Student loan interest received by the lender	1

Record Name: Payer "A" Record Payer "A" Record (continued)			
Field Position	**Field Title**	**Length**	**General Field Description**
Amount Codes **Form 1098-T, *Tuition Statement***			For Reporting Payments on Form 1098-T: **Amount Type** / **Amount Code** Payments received for qualified tuition and related expenses. — 1 Amounts billed for qualified tuition and related expenses. — 2 Adjustments made for prior year. — 3 Scholarships or grants — 4 Adjustments to scholarships or grants for a prior year. — 5 Reimbursements or refunds of qualified tuition and related expenses from an insurance contract. — 7 Note 1: For Amount Codes 1 and 2, enter either payments received or amounts billed. Do not report both. Note 2: Amount Codes 3 and 5 are assumed to be negative. It is not necessary to code with an over punch or dash to indicate a negative reporting.
Amount Codes **Form 1099-A, *Acquisition or Abandonment of Secured Property***			For Reporting Payments on Form 1099-A: **Amount Type** / **Amount Code** Balance of principal outstanding — 2 Fair market value of the property — 4

Record Name: Payer "A" Record Payer "A" Record (continued)			
Field Position	**Field Title**	**Length**	**General Field Description**

Amount Codes

Form 1099-B, *Proceeds From Broker and Barter Exchange Transactions*

For Reporting Payments on Form 1099-B:

Amount Type	Amount Code
Proceeds (For forward contracts. See Note 1).	2
Cost or other basis	3
Federal income tax withheld (backup withholding) Do not report negative amounts	4
Adjustment	5
Bartering	7
Profit (or loss) realized in 2014 (See Note 2)	9
Unrealized profit (or loss) on open contracts 12/31/2013 (See Note 2)	A
Unrealized profit (or loss) on open contracts 12/31/2014 (See Note 2)	B
Aggregate profit (or loss)	C

Note 1: The payment amount field associated with Amount Code 2 may be used to report a loss from a closing transaction on a forward contract. Refer to the "B" Record – General Field Descriptions and Record Layouts, Payment Amount Fields, for instructions on reporting negative amounts.

Note 2: Payment Amount Fields 9, A, B, and C are to be used for the reporting of regulated futures or foreign currency contracts.

Amount Codes

Form 1099-C, *Cancellation of Debt*

For Reporting Payments on Form 1099-C:

Amount Type	Amount Code
Amount of debt discharged	2
Interest, if included in Amount Code 2	3
Fair market value of property. Use only if a combined Form 1099-A and 1099-C is being filed.	7

Amount Codes

Form 1099-CAP, *Changes in Corporate Control and Capital Structure*

For Reporting Payments on Form 1099-CAP:

Amount Type	Amount Code
Aggregate amount received	2

Record Name: Payer "A" Record Payer "A" Record (continued)			
Field Position	**Field Title**	**Length**	**General Field Description**

Amount Codes

Form 1099-DIV, *Dividends and Distributions*

For Reporting Payments on Form 1099-DIV:

Amount Type	Amount Code
Total ordinary dividends	1
Qualified dividends	2
Total capital gain distribution	3
Unrecaptured Section 1250 gain	6
Section 1202 gain	7
Collectibles (28%) rate gain	8
Nondividend distributions	9
Federal income tax withheld	A
Investment expenses	B
Foreign tax paid	C
Cash liquidation distributions	D
Non-cash liquidation distributions	E
Exempt Interest Dividends	F
Specified Private Activity Bond Interest Dividends	G

Amount Codes

Form 1099-G, *Certain Government Payments*

For Reporting Payments on Form 1099-G:

Amount Type	Amount Code
Unemployment compensation	1
State or local income tax refunds, credits, or offsets	2
Federal income tax withheld (backup withholding or voluntary withholding on unemployment compensation of Commodity Credit Corporation Loans or certain crop disaster payments)	4
Reemployment Trade Adjustment Assistance (RTAA) programs	5
Taxable grants	6
Agriculture payments	7
Market Gain	9

Record Name: Payer "A" Record Payer "A" Record (continued)			
Field Position	**Field Title**	**Length**	**General Field Description**

Amount Codes

Form 1099-INT, *Interest Income*

For Reporting Payments on Form 1099-INT:

Amount Type	Amount Code
Interest income not included in Amount Code 3	1
Early withdrawal penalty	2
Interest on U.S. Savings Bonds and Treasury obligations	3
Federal income tax withheld (backup withholding)	4
Investment expenses	5
Foreign tax paid	6
Tax-exempt interest	8
Specified Private Activity Bond	9
Market Discount	A
Bond Premium	B

Amount Codes

Form 1099-K, *Payment Card and Third Party Network Transactions*

For Reporting Payments on Form 1099-K:

Amount Type	Amount Code
Gross amount of payment card/third party network transactions	1
Card Not Present Transactions	2
Federal Income Tax Withheld	4
January payments	5
February payments	6
March payments	7
April payments	8
May payments	9
June payments	A
July payments	B
August payments	C
September payments	D
October payments	E
November payments	F
December payments	G

Record Name: Payer "A" Record Payer "A" Record (continued)			
Field Position	**Field Title**	**Length**	**General Field Description**

Amount Codes

Form 1099-LTC, *Long-Term Care and Accelerated Death Benefits*

For Reporting Payments on Form 1099-LTC:

Amount Type	Amount Code
Gross long-term care benefits paid	1
Accelerated death benefits paid	2

Amount Codes

Form 1099-MISC, *Miscellaneous Income*

Note 1: If only reporting a direct sales indicator (see "B" Record field position 547), use Type of Return "A" in field positions 26-27, and Amount Code 1 in field position 28 of the Payer "A" Record. All payment amount fields in the Payee "B" Record will contain zeros.

Note 2: Do not report timber royalties under a "pay-as-cut" contract; these must be reported on Form 1099-S.

For Reporting Payments on Form 1099-MISC:

Amount Type	Amount Code
Rents	1
Royalties (See Note 2)	2
Other income	3
Federal income tax withheld (backup withholding or withholding on Indian gaming profits)	4
Fishing boat proceeds	5
Medical and health care payments	6
Nonemployee compensation	7
Substitute payments in lieu of dividends or interest	8
Crop insurance proceeds	A
Excess golden parachute payment	B
Gross proceeds paid to an attorney in connection with legal services	C
Section 409A Deferrals	D
Section 409A Income	E

Amount Codes

Form 1099-OID, *Original Issue Discount*

For Reporting Payments on Form 1099-OID:

Amount Type	Amount Code
Original issue discount for *2014*	1
Other periodic interest	2
Early withdrawal penalty	3
Federal income tax withheld (backup withholding)	4
Original issue discount on U.S. Treasury Obligations	6
Investment expenses	7
Market Discount	A
Acquisition Premium	B

Record Name: Payer "A" Record Payer "A" Record (continued)			
Field Position	**Field Title**	**Length**	**General Field Description**

Amount Codes

Form 1099-PATR, *Taxable Distributions Received From Cooperatives*

For Reporting Payments on Form 1099-PATR:

Amount Type	Amount Code
Patronage dividends	1
Nonpatronage distributions	2
Per-unit retain allocations	3
Federal income tax withheld (backup withholding)	4
Redemption of nonqualified notices and retain allocations	5
Deduction for domestic production activities income.	6
Pass-Through Credits	
Investment credit	7
Work opportunity credit	8
Patron's alternative minimum tax (AMT) adjustment	9
For filer's use for pass-through credits and deduction	A

Amount Codes

Form 1099-Q - *Payments From Qualified Education Programs (Under Sections 529 and 530)*

For Reporting Payments on Form 1099-Q:

Amount Type	Amount Code
Gross distribution	1
Earnings *(or loss)*	2
Basis	3

Record Name: Payer "A" Record Payer "A" Record (continued)			
Field Position	**Field Title**	**Length**	**General Field Description**

Amount Codes

Form 1099-R, *Distributions From Pensions, Annuities, Retirement or Profit-Sharing Plans, IRAs, Insurance Contracts, etc.*

For Reporting Payments on Form 1099-R:

Amount Type	Amount Code
Gross distribution	1
Taxable amount (see Note 1)	2
Capital gain (included in Amount Code 2)	3
Federal income tax withheld	4
Employee contributions/ designated Roth contributions or insurance premiums	5
Net unrealized appreciation in employer's securities	6
Other	8
Total employee contributions	9
Traditional IRA/SEP/ SIMPLE distribution or Roth Conversion (see Note 2)	A
Amount allocable to IRR within 5 years	B

Note 1: If the taxable amount cannot be determined, enter a "1" (one) in position 547 of the "B" Record. Payment Amount 2 must contain zeros.

Note 2: For Form 1099-R, report the Roth conversion or total amount distributed from an IRA, SEP, or SIMPLE in Payment Amount Field A (IRA/SEP/SIMPLE distribution or Roth conversion) of the Payee "B" Record, and generally, the same amount in Payment Amount Field 1 (Gross Distribution). The IRA/SEP/SIMPLE indicator should be set to "1" (one) in field position 548 of the Payee "B" Record.

Amount Codes

Form 1099-S, *Proceeds From Real Estate Transactions*

For Reporting Payments on Form 1099-S:

Amount Type	Amount Code
Gross proceeds	2
Buyer's part of real estate tax	5

Note: Include payments of timber royalties made under a "pay-as-cut" contract, reportable under IRC section 6050N. If timber royalties are being reported, enter "TIMBER" in the description field of the "B" Record. If lump-sum timber payments are being reported, enter "LUMP-SUM TIMBER PAYMENT" in the description field of the "B"record.

Record Name: Payer "A" Record Payer "A" Record (continued)			
Field Position	**Field Title**	**Length**	**General Field Description**
Amount Codes **Form 1099-SA, *Distributions From an HSA, Archer MSA, or Medicare Advantage MSA***			For Reporting Distributions on Form 1099-SA: **Amount Type** / **Amount Code** Gross distribution: 1 Earnings on excess contributions: 2 Fair market value of the account on the date of death: 4
Amount Codes **Form 3921, *Exercise of a Qualified Incentive Stock Option Under Section 422(b)***			For Reporting Information on Form 3921: **Amount Type** / **Amount Code** Exercise price per share: 3 Fair market value of share on exercise date: 4
Amount Codes **Form 3922, *Transfer of Stock Acquired Through an Employee Stock Purchase Plan Under Section 423(c)***			For Reporting Information on Form 3922: **Amount Type** / **Amount Code** Fair market value per share on grant date: 3 Fair market value on exercise date: 4 Exercise price per share: 5 Exercise price per share determined as if the option was exercised on the date the option was granted: 8

Record Name: Payer "A" Record Payer "A" Record (continued)			
Field Position	**Field Title**	**Length**	**General Field Description**

Amount Codes

Form 5498, *IRA Contribution Information*

For Reporting Information on Form 5498:

Amount Type	Amount Code
IRA contributions (other than amounts in Amount Codes 2, 3, 4, 8, 9, A, C, and D.) (See Note 1 and Note 2)	1
Rollover contributions	2
Roth conversion amount	3
Recharacterized contributions	4
Fair market value of account	5
Life insurance cost included in Amount Code 1	6
FMV of certain specified assets. (See Note 3.)	7
SEP contributions	8
SIMPLE contributions	9
Roth IRA contributions	A
RMD amount	B
Postponed Contribution	C
Repayments	D

Note 1: If reporting IRA contributions for a participant in a military operation, see the 2014 Instructions for Forms 1099-R and 5498.

Note 2: Also, include employee contributions to an IRA under a SEP plan but not salary reduction contributions. Do not include employer contributions; these are included in *Amount Code 8.*

Note 3: Amount Code 7 is optional for TY2014/PY2015.

Amount Codes

Form 5498-ESA, *Coverdell ESA Contribution Information*

For Reporting Information on Form 5498-ESA:

Amount Type	Amount Code
Coverdell ESA contributions	1
Rollover contributions	2

Record Name: Payer "A" Record Payer "A" Record (continued)			
Field Position	**Field Title**	**Length**	**General Field Description**
Amount Codes **Form 5498-SA, *HSA, Archer MSA or Medicare Advantage MSA Information***			For Reporting Information on Form 5498-SA: **Amount Type** / **Amount Code** Employee or self-employed person's Archer MSA contributions made in 2014 and 2015 for 2014 — 1 Total contributions made in 2014 — 2 Total HSA or Archer MSA contributions made in 2015 for 2014 — 3 Rollover contributions (see Note) — 4 Fair market value of HSA, Archer MSA or Medicare Advantage MSA — 5 Note: This is the amount of any rollover made to this MSA in 2014 after a distribution from another MSA. For detailed information on reporting, see the 2014 Instructions for Forms 1099-R and 5498.
Amount Codes **W-2G, *Certain Gambling Winnings***			For Reporting Payments on Form W-2G: **Amount Type** / **Amount Code** Gross winnings — 1 Federal income tax withheld — 2 Winnings from identical wagers — 7
44-51	Blank	8	Enter blanks.
52	Foreign Entity Indicator	1	Enter a "1" (one) if the payer is a foreign entity and income is paid by the foreign entity to a U.S. resident; otherwise, enter a blank.
53-92	First Payer Name Line	40	**Required**. Enter the name of the payer whose TIN appears in positions 12-20 of the "A" Record. (The transfer agent's name is entered in the Second Payer Name Line Field, if applicable).Left justify information and fill unused positions with blanks. Delete extraneous information.
93-132	Second Payer Name Line	40	If position 133 Transfer (or Paying) Agent Indicator contains a "1" (one), this field must contain the name of the transfer or paying agent. If position 133 contains a "0" (zero), this field may contain either a continuation of the First Payer Name Line or blanks. Left justify the information and fill unused positions with blanks.

Record Name: Payer “A” Record Payer “A” Record (continued)			
Field Position	**Field Title**	**Length**	**General Field Description**
133	Transfer Agent Indicator	1	**Required**. Enter the appropriate numeric code from the table below. **Meaning** / **Code** The entity in the Second Payer Name Line Field is the transfer (or paying) agent. — 1 The entity shown is not the transfer (or paying) agent (that is, the Second Payer Name Line Field either contains a continuation of the First Payer Name Line Field or blanks) — 0
134-173	Payer Shipping Address	40	**Required**. If position 133 Transfer Agent Indicator is “1” (one), enter the shipping address of the transfer or paying agent. Otherwise, enter the actual shipping address of the payer. The street address includes street number, apartment or suite number, or PO Box address if mail is not delivered to a street address. Left justify the information, and fill unused positions with blanks. For U.S. addresses, the payer city, state, and ZIP Code must be reported as 40-, 2-, and 9-position fields, respectively. Filers must adhere to the correct format for the payer city, state, and ZIP Code. For foreign addresses, filers may use the payer city, state, and ZIP Code as a continuous 51-position field. Enter information in the following order: city, province or state, postal code, and the name of the country. When reporting a foreign address, the Foreign Entity Indicator in position 52 must contain a "1" (one).
174-213	Payer City	40	**Required**. If the Transfer Agent Indicator in position 133 is a “1” (one), enter the city, town, or post office of the transfer agent. Otherwise, enter payer’s city, town, or post office city. Do not enter state and ZIP Code information in this field. Left-justify the information and fill unused positions with blanks.
214-215	Payer State	2	**Required**. Enter the valid U.S. Postal Service state abbreviation. Refer to Part A, Sec. 12, Table 2, State & U.S. Territory Abbreviations.
216-224	Payer ZIP Code	9	**Required**. Enter the valid nine digit ZIP Code assigned by the U.S. Postal Service. If only the first five digits are known, left-justify the information and fill unused positions with blanks. For foreign countries, alpha characters are acceptable as long as the filer has entered a “1” (one) in “A” Record, field position 52 Foreign Indicator.

Record Name: Payer "A" Record Payer "A" Record (continued)			
Field Position	**Field Title**	**Length**	**General Field Description**
225-239	Payer's Telephone Number and Extension	15	Enter the payer's telephone number and extension. Omit hyphens. Left justify the information and fill unused positions with blanks.
240-499	Blank	260	Enter blanks.
500-507	Record Sequence Number	8	**Required**. Enter the number of the record as it appears within the file. The record sequence number for the "T" Record will always be "1" (one), since it is the first record on the file and the file can have only one "T" Record. Each record, thereafter, must be increased by one in ascending numerical sequence, that is, 2, 3, 4, etc. Right justify numbers with leading zeros in the field. For example, the "T" Record sequence number would appear as "00000001" in the field, the first "A" Record would be "00000002," the first "B" Record, "00000003," the second "B" Record, "00000004" and so on until the final record of the file, the "F" Record.
508-748	Blank	241	Enter blanks.
749-750	Blank	2	Enter blanks or carriage return/line feed (CR/LF) characters.

Payer "A" Record - Record Layout

Record Type	Payment Year	Combined Federal/State Filing Program	Blank	Payer TIN	Payer Name Control
1	2-5	6	7-11	12-20	21-24
Last Filing Indicator	Type of Return	Amount Codes	Blank	Foreign Entity Indicator	First Payer Name Line
25	26-27	28-43	44-51	52	53-92
Second Payer Name Line	Transfer Agent Indicator	Payer Shipping Address	Payer City	Payer State	Payer ZIP Code
93-132	133	134-173	174-213	214-215	216-224
Payer's Telephone Number & Extension	Blank	Record Sequence Number	Blank	Blank or CR/LF	
225-239	240-499	500-507	508-748	749-750	

Sec. 3 Payee "B" Record

General Field Descriptions

The "B" Record contains the payment information from information returns.

- The record layout for field positions 1 through 543 is the same for all types of returns.
- Field positions 544 through 750 vary for each type of return to accommodate special fields for individual forms.
- Allow for all 16 Payment Amount Fields. For the fields not used, enter "0" (zeros).
- All records must be a fixed length of 750 positions.
- All alpha characters must be upper case.
- Do not use decimal points (.) to indicate dollars and cents.

For all fields marked "Required," the transmitter must provide the information described under "General Field Description." For those fields not marked "Required," the transmitter must allow for the field, but may be instructed to enter blanks or zeros in the indicated field position(s) and for the indicated length.

A field is also provided for Special Data Entries. This field may be used to record information required by state or local governments, or for the personal use of the filer. The IRS does not use the data provided in the Special Data Entries Field; therefore, the IRS program does not check the content or format of the data entered in this field. It is the filer's option to use the Special Data Entries Field.

Following the Special Data Entries Field, payment fields have been allocated for State Income Tax Withheld and Local Income Tax Withheld. These fields are for the convenience of filers. The information will not be used by the IRS.

Adhere to guidelines listed in Part A, Sec. 11, *Combined Federal/State Filing Program (CF/SF)* if participating in the program.

Record Name: Payee "B" Record

Field Position	Field Title	Length	General Field Description
1	Record Type	1	**Required.** Enter "B."
2-5	Payment Year	4	**Required.** Enter "2014." If reporting prior year data, report the year which applies (2013, 2012, etc.)
6	Corrected Return Indicator (See Note.)	1	**Required for corrections only.** Indicates a corrected return. Enter the appropriate code from the following table. **Definition** / **Code** For a one-transaction correction or the first of a two-transaction correction: G For a second transaction of a two-transaction correction: C For an original return: Blank Note: C, G, and non-coded records must be reported using separate Payer "A" Records.

Record Name: Payee "B" Record			
Field Position	**Field Title**	**Length**	**General Field Description**
7-10	Name Control	4	If determinable, enter the first four characters of the last name of the person whose TIN is being reported in positions 12-20 of the "B" Record; otherwise, enter blanks. Last names of less than four characters must be left-justified, filling the unused positions with blanks. Special characters and embedded blanks must be removed. Refer to Part E, Exhibit 1, *Name Control.*
11	Type of TIN	1	This field is used to identify the Taxpayer Identification Number (TIN) in positions 12-20 as either an Employer Identification Number (EIN), a Social Security Number (SSN), an Individual Taxpayer Identification Number (ITIN) or an Adoption Taxpayer Identification Number (ATIN). Enter the appropriate code from the following table:

TIN	Type of Account	Code
EIN	A business, organization, some sole proprietors or other entity	1
SSN	An individual, including some sole proprietors	2
ITIN	An individual required to have a taxpayer identification number but who is not eligible to obtain an SSN	2
ATIN	An adopted individual prior to the assignment of a SSN	2
N/A	If the type of TIN is not determinable, enter a blank	Blank

Record Name: Payee "B" Record			
Field Position	**Field Title**	**Length**	**General Field Description**
12-20	Payee's Taxpayer Identification Number (TIN)	9	**Required**. Enter the nine-digit Taxpayer Identification Number of the payee (SSN, ITIN, ATIN, or EIN). Do not enter hyphens or alpha characters. If an identification number has been applied for but not received, enter blanks. All zeros, ones, twos, etc., will have the effect of an incorrect TIN. If the TIN is not available, enter blanks. Note: If the filer is required to report payments made through Foreign Intermediaries and Foreign Flow-Through Entities on Form 1099, refer to 2014 General Instructions for Certain Information Returns for reporting instructions.
21-40	Payer's Account Number For Payee	20	**Required** if submitting more than one information return of the same type for the same payee. Enter any number assigned by the payer to the payee that can be used by the IRS to distinguish between information returns. This number must be unique for each information return of the same type for the same payee. If a payee has more than one reporting of the same document type, it is vital that each reporting have a unique account number. For example, if a payer has three separate pension distributions for the same payee and three separate Forms 1099-R are filed, three separate unique account numbers are required. A payee's account number may be given a unique sequencing number, such as 01, 02 or A, B, etc., to differentiate each reported information return. Do not use the payee's TIN since this will not make each record unique. This information is critical when corrections are filed. This number will be provided with the backup withholding notification and may be helpful in identifying the branch or subsidiary reporting the transaction. The account number can be any combination of alpha, numeric, or special characters. If fewer than 20 characters are used, filers may either left or right justify, filling the remaining positions with blanks.
41-44	Payer's Office Code	4	Enter the office code of the payer; otherwise, enter blanks. For payers with multiple locations, this field may be used to identify the location of the office submitting the information returns. This code will also appear on backup withholding notices.
45-54	Blank	10	Enter blanks.

Record Name: Payee "B" Record			
Field Position	**Field Title**	**Length**	**General Field Description**
Payment Amount Fields (Must be numeric)			**Required.** Filers should allow for all payment amounts. For those not used, enter zeros. Each payment field must contain 12 numeric characters. Each payment amount must contain U.S. dollars and cents. The right-most two positions represent cents in the payment amount fields. Do not enter dollar signs, commas, decimal points, or negative payments, except those items that reflect a loss on Form 1099-B or 1099-Q. Positive and negative amounts are indicated by placing a "+" (plus) or "-" (minus) sign in the left-most position of the payment amount field. A negative over punch in the unit's position may be used instead of a minus sign, to indicate a negative amount. If a plus sign, minus sign, or negative over punch is not used, the number is assumed to be positive. Negative over punch cannot be used in PC created files. Payment amounts must be right justified and unused positions must be zero filled.
Caution: If payment amounts exceed the 12 field positions allotted, a separate Payee "B" Record must be submitted for the remainder. The files cannot be exactly the same to avoid duplicate filing discrepancies. For example: For Form 1099-K reporting 12,000,000,000.00, the first "B" record would show 8,000,000,000.00 and the second "B" record would show 4,000,000,000.00. One substitute Form 1099-K may be sent to the recipient aggregating the multiple Forms 1099-K.			
55-66	Payment Amount 1*	12	The amount reported in this field represents payments for Amount Code 1 in the "A" Record.
67-78	Payment Amount 2*	12	The amount reported in this field represents payments for Amount Code 2 in the "A" Record.
79-90	Payment Amount 3*	12	The amount reported in this field represents payments for Amount Code 3 in the "A" Record.
91-102	Payment Amount 4*	12	The amount reported in this field represents payments for Amount Code 4 in the "A" Record.
103-114	Payment Amount 5*	12	The amount reported in this field represents payments for Amount Code 5 in the "A" Record.
115-126	Payment Amount 6*	12	The amount reported in this field represents payments for Amount Code 6 in the "A" Record.
127-138	Payment Amount 7*	12	The amount reported in this field represents payments for Amount Code 7 in the "A" Record.
139-150	Payment Amount 8*	12	The amount reported in this field represents payments for Amount Code 8 in the "A" Record.
151-162	Payment Amount 9*	12	The amount reported in this field represents payments for Amount Code 9 in the "A" Record.
163-174	Payment Amount A*	12	The amount reported in this field represents payments for Amount Code A in the "A" Record.
175-186	Payment Amount B*	12	The amount reported in this field represents payments for Amount Code B in the "A" Record.
187-198	Payment Amount C*	12	The amount reported in this field represents payments for Amount Code C in the "A" Record.
199-210	Payment Amount D*	12	The amount reported in this field represents payments for Amount Code D in the "A" Record.

Record Name: Payee "B" Record			
Field Position	**Field Title**	**Length**	**General Field Description**
211-222	Payment Amount E*	12	The amount reported in this field represents payments for Amount Code E in the "A" Record.
223-234	Payment Amount F*	12	The amount reported in this field represents payments for Amount Code F in the "A" Record.
235-246	Payment Amount G*	12	The amount reported in this field represents payments for Amount Code G in the "A" Record.
*Note: If there are discrepancies between the payment amount fields and the boxes on the paper forms, the instructions in this publication must be followed for electronic filing.			
247	Foreign Country Indicator	1	If the address of the payee is in a foreign country, enter a "1" (one) in this field; otherwise, enter blank. When filers use the foreign country indicator, they may use a free format for the payee city, state, and ZIP Code. Enter information in the following order: city, province or state, postal code, and the name of the country. Address information must not appear in the First or Second Payee Name Lines.
248-287	First Payee Name Line	40	**Required.** Enter the name of the payee (preferably last name first) whose Taxpayer Identification Number (TIN) was provided in positions 12-20 of the Payee "B" Record. Left justify the information and fill unused positions with blanks. If more space is required for the name, use the Second Payee Name Line Field. If reporting information for a sole proprietor, the individual's name must always be present on the First Payee Name Line. The use of the business name is optional in the Second Payee Name Line Field. End the First Payee Name Line with a full word. Extraneous words, titles, and special characters (that is, Mr., Mrs., Dr., period, apostrophe) should be removed from the Payee Name Lines. A hyphen (-) and an ampersand (&) are the only acceptable special characters for First and Second Payee Name Lines. Note: If a filer is required to report payments made through Foreign Intermediaries and Foreign Flow-Through Entities on Form 1099, see the 2014 General Instructions for Certain Information Returns for reporting instructions.
288-327	Second Payee Name Line	40	If there are multiple payees (for example, partners, joint owners, or spouses), use this field for those names not associated with the TIN provided in positions 12-20 of the "B" Record, or if not enough space was provided in the First Payee Name Line, continue the name in this field. Do not enter address information. It is important that filers provide as much payee information to the IRS as possible to identify the payee associated with the TIN. See the Note under the First Payee Name Line. Left justify the information and fill unused positions with blanks. See Note above under the First Payee Name Line.
328-367	Blank	40	Enter blanks.

Record Name: Payee "B" Record			
Field Position	**Field Title**	**Length**	**General Field Description**
368-407	Payee Mailing Address	40	**Required.** Enter the mailing address of the payee. The street address should include number, street, apartment or suite number, or PO Box if mail is not delivered to a street address. Do not enter data other than the payee's mailing address.
408-447	Blank	40	Enter blanks.
448-487	Payee City	40	**Required.** Enter the city, town or post office. Enter APO or FPO if applicable. Do not enter state and ZIP Code information in this field. Left justify the information and fill unused positions with blanks.
488-489	Payee State	2	**Required.** Enter the valid U.S. Postal Service state abbreviations for states or the appropriate postal identifier (AA, AE, or AP). Refer to Part A, Sec 12, Table 2, *State & U.S. Territory Abbreviations.*
490-498	Payee ZIP Code	9	**Required.** Enter the valid ZIP Code (nine-digit or five-digit) assigned by the U.S. Postal Service. For foreign countries, alpha characters are acceptable as long as the filer has entered a "1" (one) in the Foreign Country Indicator, located in position 247 of the "B" Record. If only the first five-digits are known, left justify the information and fill the unused positions with blanks.
499	Blank	1	Enter blank.
500-507	Record Sequence Number	8	**Required.** Enter the number of the record as it appears within the file. The record sequence number for the "T" Record will always be one (1), since it is the first record on the file and the file can have only one "T" Record in a file. Each record, thereafter, must be increased by one in ascending numerical sequence, that is, 2, 3, 4, etc. Right justify numbers with leading zeros in the field. For example, the "T" Record sequence number would appear as "00000001" in the field, the first "A" Record would be "00000002," the first "B" Record, "00000003," the second "B" Record, "00000004" and so on until the final record of the file, the "F" Record.
508-543	Blank	36	Enter blanks.

Standard Payee "B" Record Format For

All Types of Returns, Positions 1-543

Record Type	Payment Year	Corrected Return Indicator	Name Control	Type of TIN	Payee's TIN
1	2-5	6	7-10	11	12-20
Payer's Account number for Payee	Payer's Office Code	Blank	Payment Amount 1	Payment Amount 2	Payment Amount 3
21-40	41-44	45-54	55-66	67-78	79-90
Payment Amount 4	Payment Amount 5	Payment Amount 6	Payment Amount 7	Payment Amount 8	Payment Amount 9
91-102	103-114	115-126	127-138	139-150	151-162
Payment Amount A	Payment Amount B	Payment Amount C	Payment Amount D	Payment Amount E	Payment Amount F
163-174	175-186	187-198	199-210	211-222	223-234
Payment Amount G	Foreign Country Indicator	First Payee Name Line	Second Payee Name Line	Blank	Payee Mailing Address
235-246	247	248-287	288-327	328-367	368-407
Blank	Payee City	Payee State	Payee ZIP Code	Blank	Record Sequence Number
408-447	448-487	488-489	490-498	499	500-507
Blank					
508-543					

The following sections define the field positions for the different types of returns in the Payee "B" Record (positions 544-750):

Section	Form	Section	Form
(1)	Form 1097-BTC	(16)	Form 1099-OID*
(2)	Form 1098	(17)	Form 1099-PATR*
(3)	Form 1098-C	(18)	Form 1099-Q
(4)	Form 1098-E	(19)	Form 1099-R*
(5)	Form 1098-T	(20)	Form 1099-S
(6)	Form 1099-A	(21)	Form 1099-SA
(7)	Form 1099-B*	(22)	Form 3921
(8)	Form 1099-C	(23)	Form 3922
(9)	Form 1099-CAP	(24)	Form 5498*
(10)	Form 1099-DIV*	(25)	Form 5498-ESA
(11)	Form 1099-G*	(26)	Form 5498-SA
(12)	Form 1099-INT*	(27)	Form W-2G
(13)	Form 1099-K*		
(14)	Form 1099-LTC		
(15)	Form 1099-MISC*		

* These forms may be filed through the Combined Federal/State Filing Program (CF/SF). The IRS will forward these records to participating states for filers who have been approved for the program.

(1) Payee "B" Record - Record Layout Positions 544-750 for Form 1097-BTC

<table>
<tr><th>Field Position</th><th>Field Title</th><th>Length</th><th>General Field Description</th></tr>
<tr><td>544-546</td><td>Blank</td><td>3</td><td>Enter blanks.</td></tr>
<tr><td>547</td><td>Issuer Indicator</td><td>1</td><td>Required. Enter the appropriate indicator from the table below:
<table>
<tr><th>Usage</th><th>Indicator</th></tr>
<tr><td>Issuer of bond or its agent filing initial 2014 Form 1097-BTC for credit being reported</td><td>1</td></tr>
<tr><td>An entity that received a 2014 Form 1097-BTC for credit being reported.</td><td>2</td></tr>
</table></td></tr>
</table>

(1) Payee "B" Record - Record Layout Positions 544-750 for Form 1097-BTC

<table>
<tr><th>Field Position</th><th>Field Title</th><th>Length</th><th>General Field Description</th></tr>
<tr><td>548-555</td><td>Blanks</td><td>8</td><td>Enter blanks.</td></tr>
<tr><td>556</td><td>Code</td><td>1</td><td>Required. Enter the appropriate alpha indicator from the table below:
<table>
<tr><th>Usage</th><th>Indicator</th></tr>
<tr><td>Account number</td><td>A</td></tr>
<tr><td>CUSIP number</td><td>C</td></tr>
<tr><td>Unique Identification Number, not an account/CUSIP number, such as a self-provided identification number.</td><td>O</td></tr>
</table></td></tr>
<tr><td>557-559</td><td>Blanks</td><td>3</td><td>Enter blanks.</td></tr>
<tr><td>560-598</td><td>Unique Identifier</td><td>39</td><td>Enter the unique identifier assigned to the bond. This can be an alphanumeric identifier such as the CUSIP number.
Right justify the information and fill unused positions with blanks.</td></tr>
<tr><td>599-601</td><td>Bond Type</td><td>3</td><td>Required.
Enter the appropriate indicator from the table below:
<table>
<tr><th>Usage</th><th>Indicator</th></tr>
<tr><td>Clean Renewable Energy Bond</td><td>101</td></tr>
<tr><td>Other</td><td>199</td></tr>
</table></td></tr>
<tr><td>602-662</td><td>Blank</td><td>61</td><td>Enter blanks.</td></tr>
<tr><td>663-722</td><td>Special Data Entries</td><td>60</td><td>This portion of the "B" Record may be used to record information for state or local government reporting or for the filer's own purposes. Payers should contact the state or local revenue departments for filing requirements. You may enter comments here. If this field is not used, enter blanks.</td></tr>
<tr><td>723-748</td><td>Blank</td><td>26</td><td>Enter blanks.</td></tr>
<tr><td>749-750</td><td>Blank</td><td>2</td><td>Enter blanks or carriage return/line feed (CR/LF) characters.</td></tr>
</table>

Payee "B" Record - Record Layout Positions 544-750 for Form 1097-BTC

Blank	Issuer Indicator	Blank	Code	Blank	Unique Identifier
544-546	547	548-555	556	557-559	560-598

Bond Type	Blank	Special Data Entries	Blank	Blank or CR/LF
599-601	602-662	663-722	723-748	749-750

---

(2) Payee "B" Record - Record Layout Positions 544-750 for Form 1098

Field Position	Field Title	Length	General Field Description
544-662	Blank	119	Enter blanks.
663-722	Special Data Entries	60	This portion of the "B" Record may be used to record information for state or local government reporting or for the filer's own purposes. Payers should contact the state or local revenue departments for filing requirements. If this field is not used, enter blanks.
723-748	Blank	26	Enter blanks.
749-750	Blank	2	Enter blanks or carriage return/line feed (CR/LF) characters.

Payee "B" Record - Record Layout Positions 544-750 for Form 1098

Blank	Special Data Entries	Blank	Blank or CR/LF
544-662	663-722	723-748	749-750

---

(3) Payee "B" Record - Record Layout Positions 544-750 for Form 1098-C

Field Position	Field Title	Length	General Field Description
544-545	Blank	2	Enter blanks.
546	Transaction Indicator	1	Enter "1" (one) if the amount reported in Payment Amount Field 4 is an arm's length transaction to an unrelated party; otherwise, enter a blank.
547	Transfer After Improvements Indicator	1	Enter "1" (one) if the vehicle will not be transferred for money, other property, or services before completion of material improvements or significant intervening use; otherwise, enter a blank.

(3) Payee "B" Record - Record Layout Positions 544-750 for Form 1098-C

Field Position	Field Title	Length	General Field Description
548	Transfer Below Fair Market Value Indicator	1	Enter "1" (one) if the vehicle is transferred to a needy individual for significantly below fair market value; otherwise, enter a blank.
549-552	Year	4	Enter the Year of the vehicle in the format YYYY.
553-565	Make	13	Enter the Make of the vehicle. Left justify the information and fill unused positions with blanks.
566-587	Model	22	Enter the Model of the vehicle. Left justify the information and fill unused positions with blanks.
588-612	Vehicle or Other Identification Number	25	Enter the vehicle or other identification number of the donated vehicle. Left justify the information and fill unused positions with blanks.
613-651	Vehicle Description	39	Enter a description of material improvements or significant intervening use and duration of use. Left justify the information and fill unused positions with blanks.
652-659	Date of Contribution	8	Enter the date the contribution was made to an organization, in the format YYYYMMDD (for example, January 5, 2014, would be 20140105. Do not enter hyphens or slashes.
660	Donee Indicator	1	Enter the appropriate indicator from the following table to report if the Donee of the vehicle provides goods or services in exchange for the vehicle. **Usage** / **Indicator** Donee provided goods or services: 1 Donee did not provide goods or services: 2
661	Intangible Religious Benefits Indicator	1	Enter a "1" (one) if only intangible religious benefits were provided in exchange for the vehicle; otherwise, enter a blank.
662	Deduction $500 or Less Indicator	1	Enter a "1" (one) if under the law the donor cannot claim a deduction of more than $500 for the vehicle; otherwise, enter a blank.
663-722	Special Data Entries	60	You may enter Odometer mileage here. Enter as 7 numeric characters. The remaining positions of this field may be used to record information for state and local government reporting or for the filer's own purposes. Payers should contact the state or local revenue departments for the filing requirements. If this field is not used, enter blanks.

(3) Payee "B" Record - Record Layout Positions 544-750 for Form 1098-C

Field Position	Field Title	Length	General Field Description
723-730	Date of Sale	8	Enter the date of sale, in the format YYYYMMDD (for example, January 5, 2014, would be 20140105). Do not enter hyphens or slashes.
731-746	Goods and Services	16	Enter a description of any goods and services received for the vehicle; otherwise, enter blanks. Left justify information and fill unused positions with blanks.
747-748	Blank	2	Enter blanks.
749-750	Blank	2	Enter blanks or carriage return/line feed (CR/LF) characters.

Payee "B" Record - Record Layout Positions 544-750 for Form 1098-C

Blank	Transaction Indicator	Transfer After Improvements Indicator	Transfer Below Fair Market Value Indicator	Year	Make
544-545	546	547	548	549-552	553-565

Model	Vehicle or Other Identification Number	Vehicle Description	Date of Contribution	Donee Indicator	Intangible Religious Benefits Indicator
566-587	588-612	613-651	652-659	660	661

Deduction $500 or Less Indicator	Special Data Entries	Date of Sale	Goods and Services	Blank	Blank or CR/LF
662	663-722	723-730	731-746	747-748	749-750

(4) Payee "B" Record - Record Layout Positions 544-750 for Form 1098-E

Field Position	Field Title	Length	General Field Description
544-546	Blank	3	Enter blanks.
547	Origination Fees/ Capitalized Interest Indicator	1	Enter "1" (one) if the amount reported in Payment Amount Field 1 does not include loan origination fees and/or capitalized interest made before September 1, 2004. Otherwise, enter a blank.
548-662	Blank	115	Enter blanks.
663-722	Special Data Entries	60	This portion of the "B" Record may be used to record information for state or local government reporting or for the filer's own purposes. Payers should contact the state or local revenue departments for the filing requirements. If this field is not used, enter blanks.
723-748	Blank	26	Enter blanks.
749-750	Blank	2	Enter blanks or carriage return/line feed (CR/LF) characters.

Payee "B" Record - Record Layout Positions 544-750 for Form 1098-E

Blank	Origination Fees/ Capitalized Interest Indicator	Blank	Special Data Entries	Blank	Blank or CR/LF
544-546	547	548-662	663-722	723-748	749-750

(5) Payee "B" Record - Record Layout Positions 544-750 for Form 1098-T

Field Position	Field Title	Length	General Field Description
544-546	Blank	3	Enter blanks.
547	Half-time Student Indicator	1	**Required**. Enter "1" (one) if the student was at least a half-time student during any academic period that began in 2014; otherwise, enter a blank.
548	Graduate Student Indicator	1	**Required**. Enter "1" (one) if the student is enrolled exclusively in a graduate level program; otherwise, enter a blank.
549	Academic Period Indicator	1	Enter "1" (one) if the amount in Payment Amount Field 1 or Payment Amount Field 2 includes amounts for an academic period beginning January through March 2015; otherwise, enter a blank.
550	Method of Reporting Amounts Indicator	1	**Required**. Enter "1" (one) if the method of reporting has changed from the previous year; otherwise, enter a blank.
551-662	Blank	112	Enter blanks.

(5) Payee "B" Record - Record Layout Positions 544-750 for Form 1098-T

Field Position	Field Title	Length	General Field Description
663-722	Special Data Entries	60	This portion of the "B" Record may be used to record information for state or local government reporting or for the filer's own purposes. Payers should contact the state or local revenue departments for the filing requirements. If this field is not used, enter blanks.
723-748	Blank	26	Enter blanks.
749-750	Blank	2	Enter blanks or carriage return/line feed (CR/LF) characters.

Payee "B" Record – Record Layout Positions 544-750 for Form 1098-T

Blank	Half-time Student Indicator	Graduate Student Indicator	Academic Period Indicator	Method of Reporting Amounts Indicator	Blank
544-546	547	548	549	550	551-662

Special Data Entries	Blank	Blank or CR/LF
663-722	723-748	749-750

(6) Payee "B" Record – Record Layout Positions 544-750 for Form 1099-A

Field Position	Field Title	Length	General Field Description
544-546	Blank	3	Enter blanks.
547	Personal Liability Indicator	1	Enter the appropriate indicator from the table below: **Usage** / **Indicator** Borrower was personally liable for repayment of the debt. / 1 Borrower was not personally liable for repayment of the debt. / Blank
548-555	Date of Lender's Acquisition or Knowledge of Abandonment	8	Enter the acquisition date of the secured property or the date the lender first knew or had reason to know the property was abandoned, in the format YYYYMMDD (for example, January 5, 2014, would be 20140105. Do not enter hyphens or slashes.

(6) Payee "B" Record – Record Layout Positions 544-750 for Form 1099-A

Field Position	Field Title	Length	General Field Description
556-594	Description of Property	39	Enter a brief description of the property. For real property, enter the address, or, if the address does not sufficiently identify the property, enter the section, lot and block. For personal property, enter the type, make and model (for example, Car-1999 Buick Regal or Office Equipment). Enter "CCC" for crops forfeited on Commodity Credit Corporation loans. If fewer than 39 positions are required, left justify the information and fill unused positions with blanks.
595-662	Blank	68	Enter blanks.
663-722	Special Data Entries	60	This portion of the "B" Record may be used to record information for state or local government reporting or for the filer's own purposes. Payers should contact the state or local revenue departments for the filing requirements. If this field is not used, enter blanks.
723-748	Blank	26	Enter blanks.
749-750	Blank	2	Enter blanks or carriage return/line feed (CR/LF) characters.

Payee "B" Record – Record Layout Positions 544-750 for Form 1099-A

Blank	Personal Liability Indicator	Date of Lender's Acquisition or Knowledge of Abandonment	Description of Property	Blank	Special Data Entries
544-546	547	548-555	556-594	595-662	663-722

Blank	Blank or CR/LF
723-748	749-750

(7) Payee "B" Record – Record Layout Positions 544-750 for Form 1099-B

Field Position	Field Title	Length	General Field Description
544	Second TIN Notice (Optional)	1	Enter "2" (two) to indicate notification by the IRS twice within three calendar years that the payee provided an incorrect name and/or TIN combination. Otherwise, enter a blank.

(7) Payee "B" Record – Record Layout Positions 544-750 for Form 1099-B

<table>
<tr><th>Field Position</th><th>Field Title</th><th>Length</th><th>General Field Description</th></tr>
<tr><td>545</td><td>Non-covered Security Indicator</td><td>1</td><td>Enter the appropriate indicator from the following table, to identify a Non-covered Security. If not a Non-covered Security, enter a blank.
<table>
<tr><th>Usage</th><th>Indicator</th></tr>
<tr><td>Non-covered Security Basis not reported to the IRS</td><td>1</td></tr>
<tr><td>Non-covered Security Basis reported to the IRS</td><td>2</td></tr>
<tr><td>Not a Non-covered Security</td><td>Blank</td></tr>
</table></td></tr>
<tr><td>546</td><td>Type of Gain or Loss Indicator</td><td>1</td><td>Enter the appropriate indicator from the following table to identify the amount reported in Amount Code 2. Otherwise, enter a blank.
<table>
<tr><th>Usage</th><th>Indicator</th></tr>
<tr><td>Short term</td><td>1</td></tr>
<tr><td>Long term</td><td>2</td></tr>
</table></td></tr>
<tr><td>547</td><td>Gross Proceeds Indicator</td><td>1</td><td>Enter the appropriate indicator from the following table to identify the amount reported in Amount Code 2; otherwise, enter a blank.
<table>
<tr><th>Usage</th><th>Indicator</th></tr>
<tr><td>Gross proceeds</td><td>1</td></tr>
<tr><td>Gross proceeds less commissions and option premiums</td><td>2</td></tr>
</table></td></tr>
<tr><td>548-555</td><td>Date Sold or Disposed</td><td>8</td><td>Do not enter hyphens or slashes. Enter blanks if this is an aggregate transaction. For broker transactions, enter the trade date of the transaction. For barter exchanges, enter the date when cash, property, a credit, or scrip is actually or constructively received in the format YYYYMMDD (for example, January 5, 2014, would be 20140105).
.</td></tr>
<tr><td>556-568</td><td>CUSIP Number</td><td>13</td><td>Right-justify the information and fill unused positions with blanks. Enter blanks if this is an aggregate transaction. Enter "0s" (zeros) if the number is not available. For broker transactions only, enter the CUSIP (Committee on Uniform Security Identification Procedures) number of the item reported for Amount Code 2 (Proceeds).</td></tr>
</table>

(7) Payee "B" Record – Record Layout Positions 544-750 for Form 1099-B

<table>
<tr><th>Field Position</th><th>Field Title</th><th>Length</th><th>General Field Description</th></tr>
<tr><td>569-607</td><td>Description of Property</td><td>39</td><td>• For broker transactions, enter a brief description of the disposition item (e.g., 100 shares of XYZ Corp).
• For regulated futures and forward contracts, enter "RFC" or other appropriate description.
• For bartering transactions, show the services or property provided.

If fewer than 39 characters are required, left-justify information and fill unused positions with blanks.</td></tr>
<tr><td>608-615</td><td>Date Acquired</td><td>8</td><td>Enter the date of acquisition in the format YYYYMMDD (for example, January 5, 2014, would be 20140105). Do not enter hyphens or slashes.

Enter blanks if this is an aggregate transaction.</td></tr>
<tr><td>616</td><td>Loss not Allowed Indicator</td><td>1</td><td>Enter a "1" (one) if the recipient is unable to claim a loss on their tax return based dollar amount in Amount Code 2 (Proceeds). Otherwise, enter a blank.</td></tr>
<tr><td>617</td><td>Applicable check box of Form 8949</td><td>1</td><td>Enter one of the following:
<table>
<tr><th>Usage</th><th>Indicator</th></tr>
<tr><td>Short-term transaction for which the cost or other basis is being reported to the IRS.</td><td>A</td></tr>
<tr><td>Short-term transaction for which the cost or other basis is not being reported to the IRS.</td><td>B</td></tr>
<tr><td>Long-term transaction for which the cost or other basis is being reported to the IRS.</td><td>D</td></tr>
<tr><td>Long-term transaction for which the cost or other basis is not being reported to the IRS.</td><td>E</td></tr>
<tr><td>Transaction if you cannot determine whether the recipient should check Box B or Box E on Form 8949 because the holding period is unknown.</td><td>X</td></tr>
</table></td></tr>
<tr><td>618</td><td>Code, if any</td><td>1</td><td>Enter one of the following:
<table>
<tr><th>Usage</th><th>Indicator</th></tr>
<tr><td>Wash</td><td>W</td></tr>
<tr><td>Collectibles</td><td>C</td></tr>
<tr><td>Market discount</td><td>D</td></tr>
</table>
May be blank filled.</td></tr>
</table>

(7) Payee "B" Record – Record Layout Positions 544-750 for Form 1099-B

Field Position	Field Title	Length	General Field Description
619 - 662	Blank	44	Enter blanks.
663-722	Special Data Entries	60	If this field is not used, enter blanks. Report the Corporation's Name, Address, City, State, and ZIP in the Special Data Entries field. This portion of the "B" Record may be used to record information for state or local government reporting or for the filer's own purposes. Payers should contact the state or local revenue departments for filing requirements.
723-734	State Income Tax Withheld	12	The payment amount must be right justified and unused positions must be zero-filled. State income tax withheld is for the convenience of the filers. This information does not need to be reported to the IRS. If not reporting state tax withheld, this field may be used as a continuation of the Special Data Entries field.
735-746	Local Income Tax Withheld	12	The payment amount must be right justified and unused positions must be zero-filled. Local income tax withheld is for the convenience of the filers. This information does not need to be reported to the IRS. If not reporting local tax withheld, this field may be used as a continuation of the Special Data Entries Field.
747-748	Combined Federal/State Code	2	Enter the valid CF/SF code if this payee record is to be forwarded to a state agency as part of the CF/SF Program. Enter the valid state code from Part A, Sec. 11, Table 1, *Participating States and Codes.* Enter blanks for payers or states not participating in this program.
749-750	Blank	2	Enter blanks or carriage return/line feed (CR/LF) characters.

Payee "B" Record - Record Layout Positions 544-750 for Form 1099-B

Second Tin Notice (Optional)	Non-Covered Security Indicator	Type of Gain or Loss Indicator	Gross Proceeds Indicator	Date Sold or Disposed	CUSIP Number
544	545	546	547	548-555	556-568

Description of Property	Date Acquired	Loss Not Allowed Indicator	Applicable check box of Form 8949	Code, if any	Blank
569-607	608-615	616	617	618	619-662

Special Data Entries	State Income Tax Withheld	Local Income Tax Withheld	Combined Federal/State Code	Blank or CR/LF
663-722	723-734	735-746	747-748	749-750

(8) Payee "B" Record - Record Layout Positions 544-750 for Form 1099-C

Field Position	Field Title	Length	General Field Description
544-546	Blank	3	Enter blanks.
547	Identifiable Event Code	1	The only required code is "A" for Bankruptcy. If not a Bankruptcy, this field may be blank filled. Enter the appropriate indicator from the following table: **Usage** / **Indicator** Bankruptcy: A Other Judicial Debt Relief: B Statute of limitations or expiration of deficiency period: C Foreclosure election: D Debt Relief from probate or similar proceeding: E By Agreement: F Creditor's debt collection policy: G Expiration of Non-Payment Testing Period: H Other actual discharge before Identifiable event: I
548-555	Date of Identifiable Event	8	Enter the date the debt was canceled in the format of YYYYMMDD (for example, January 5, 2014, would be 20140105). Do not enter hyphens or slashes.
556-594	Debt Description	39	Enter a description of the origin of the debt, such as student loan, mortgage, or credit card expenditure. If a combined Form 1099-C and 1099-A is being filed, also enter a description of the property.
595	Personal Liability Indicator	1	Enter "1" (one) if the borrower is personally liable for repayment or enter a blank if not personally liable for repayment.
596-662	Blank	67	Enter blanks.
663-722	Special Data Entries	60	This portion of the "B" Record may be used to record information for state or local government reporting or for the filer's own purposes. Payers should contact the state or local revenue departments for filing requirements. If this field is not used, enter blanks.
723-748	Blank	26	Enter blanks.
749-750	Blank	2	Enter blanks or carriage return/line feed (CR/LF) characters.

Payee "B" Record - Record Layout Positions 544-750 for Form 1099-C

Blank	Identifiable Event Code	Date of Identifiable Event	Debt Description	Personal Liability Indicator	Blank
544-546	547	548-555	556-594	595	596-662

Special Data Entries	Blank	Blank or CR/LF
663-722	723-748	749-750

---

(9) Payee "B" Record - Record Layout Positions 544-750 for Form 1099-CAP

Field Position	Field Title	Length	General Field Description
544-547	Blank	4	Enter blanks.
548-555	Date of Sale or Exchange	8	Enter the date the stock was exchanged for cash, stock in the successor corporation, or other property received in the format YYYYMMDD (for example, January 5, 2014, would be 20140105). Do not enter hyphens or slashes.
556-607	Blank	52	Enter blanks.
608-615	Number of Shares Exchanged	8	Enter the number of shares of the corporation's stock which were exchanged in the transaction. Report whole numbers only. Right justify the information and fill unused positions with zeros.
616-625	Classes of Stock Exchanged	10	Enter the class of stock that was exchanged. Left justify the information and fill unused positions with blanks.
626-662	Blank	37	Enter blanks.
663-722	Special Data Entries	60	This portion of the "B" Record may be used to record information for state or local government reporting or for the filer's own purposes. Payers should contact the state or local revenue departments for filing requirements. If this field is not used, enter blanks.

(9) Payee "B" Record - Record Layout Positions 544-750 for Form 1099-CAP

Field Position	Field Title	Length	General Field Description
723-748	Blank	26	Enter blanks.
749-750	Blank	2	Enter blanks or carriage return/line feed (CR/LF) characters.

Payee "B" Record - Record Layout Positions 544-750 for Form 1099-CAP

Blank	Date of Sale or Exchange	Blank	Number of Shares Exchanged	Classes of Stock Exchanged	Blank
544-547	548-555	556-607	608-615	616-625	626-662

Special Data Entries	Blank	Blank or CR/LF
663-722	723-748	749-750

(10) Payee "B" Record - Record Layout Positions 544-750 for Form 1099-DIV

Field Position	Field Title	Length	General Field Description
544	Second TIN Notice (Optional)	1	Enter "2" (two) to indicate notification by the IRS twice within three calendar years that the payee provided an incorrect name and/or TIN combination; otherwise, enter a blank.
545-546	Blank	2	Enter blanks.
547-586	Foreign Country or U.S. Possession	40	Enter the name of the foreign country or U.S. possession to which the withheld foreign tax (Amount Code C) applies; otherwise, enter blanks.
587-662	Blank	76	Enter blanks.
663-722	Special Data Entries	60	This portion of the "B" Record may be used to record information for state or local government reporting or for the filer's own purposes. Payers should contact the state or local revenue departments for filing requirements. If this field is not used, enter blanks.
723-734	State Income Tax Withheld	12	State income tax withheld is for the convenience of the filers. This information does not need to be reported to the IRS. If not reporting state tax withheld, this field may be used as a continuation of the Special Data Entries Field. The payment amount must be right justified and unused positions must be zero-filled.

(10) Payee "B" Record - Record Layout Positions 544-750 for Form 1099-DIV

Field Position	Field Title	Length	General Field Description
735-746	Local Income Tax Withheld	12	Local income tax withheld is for the convenience of the filers. This information does not need to be reported to the IRS. If not reporting local tax withheld, this field may be used as a continuation of the Special Data Entries Field. The payment amount must be right justified and unused positions must be zero-filled.
747-748	Combined Federal/State Code	2	Enter the valid Combined Federal/State Code if this payee record is to be forwarded to a state agency as part of the CF/SF Program. Enter the valid state code from Part A, Sec. 11, Table 1 *Participating States and Codes.* Enter Blanks for payers or states not participating in this program.
749-750	Blank	2	Enter blanks or carriage return/line feed (CR/LF) characters.

Payee "B" Record - Record Layout Positions 544-750 for Form 1099-DIV

Second TIN Notice (Optional)	Blank	Foreign Country or U.S. Possession	Blank	Special Data Entries	State Income Tax Withheld
544	545-546	547-586	587-662	663-722	723-734

Local Income Tax Withheld	Combined Federal/ State Code	Blank or CR/LF
735-746	747-748	749-750

(11) Payee "B" Record - Record Layout Positions 544-750 for Form 1099-G

Field Position	Field Title	Length	General Field Description
544-546	Blank	3	Enter blanks.
547	Trade or Business Indicator	1	Enter "1" (one) to indicate the state or local income tax refund, credit, or offset (Amount Code 2) is attributable to income tax that applies exclusively to income from a trade or business. **Usage** / **Indicator** Income tax refund applies exclusively to a trade or business: 1 Income tax refund is a general tax refund: Blank

(11) Payee "B" Record - Record Layout Positions 544-750 for Form 1099-G

Field Position	Field Title	Length	General Field Description
548-551	Tax Year of Refund	4	Enter the tax year for which the refund, credit, or offset (Amount Code 2) was issued. The tax year must reflect the tax year for which the refund was made, not the tax year of Form 1099-G. The tax year must be in four-position format of YYYY. (For example, 2013). The valid range of years for the refund is 2004 through 2013. Note: This data is not considered prior year data since it is required to be reported in the current tax year. Do NOT enter "P" in the field position 6 of Transmitter "T" Record.
552-662	Blank	111	Enter blanks.
663-722	Special Data Entries	60	You may enter your routing and transit number (RTN) here. This portion of the "B" Record may be used to record information for state or local government reporting or for the filer's own purposes. Payers should contact the state or local revenue departments for filing requirements. If this field is not used, enter blanks.
723-734	State Income Tax Withheld	12	State income tax withheld is for the convenience of the filers. This information does not need to be reported to the IRS. If not reporting state tax withheld, this field may be used as a continuation of the Special Data Entries Field. The payment amount must be right justified and unused positions must be zero-filled.
735-746	Local Income Tax Withheld	12	Local income tax withheld is for the convenience of the filers. This information does not need to be reported to the IRS. If not reporting local tax withheld, this field may be used as a continuation of the Special Data Entries Field. The payment amount must be right justified and unused positions must be zero-filled.
747-748	Combined Federal/ State Code	2	Enter the valid Combined Federal/State Code if this payee record is to be forwarded to a state agency as part of the CF/SF program. Refer to Part A, Sec. 11, Table 1 *Participating States and Codes.* For those payers or states not participating in this program, enter blanks.
749-750	Blank	2	Enter blanks or carriage return/line feed (CR/LF) characters.

Payee "B" Record - Record Layout Positions 544-750 for Form 1099-G

Blank	Trade or Business Indicator	Tax Year of Refund	Blank	Special Data Entries	State Income Tax Withheld
544-546	547	548-551	552-662	663-722	723-734

Local Income Tax Withheld	Combined Federal/ State Code	Blank or CR/LF
735-746	747-748	749-750

(12) Payee "B" Record - Record Layout Positions 544-750 for Form 1099-INT

Field Position	Field Title	Length	General Field Description
544	Second TIN Notice (Optional)	1	Enter "2" (two) to indicate notification by the IRS twice within three calendar years that the payee provided an incorrect name and/or TIN combination; otherwise, enter a blank.
545-546	Blank	2	Enter blanks.
547-586	Foreign Country or U.S. Possession	40	Enter the name of the foreign country or U.S. possession to which the withheld foreign tax (Amount Code 6) applies. Otherwise, enter blanks.
587-599	CUSIP Number	13	Enter CUSIP Number. If the tax-exempt interest is reported in the aggregate for multiple bonds or accounts, enter VARIOUS. Right-justify the information and fill unused positions with blanks.
600-662	Blank	63	Enter blanks.
663-722	Special Data Entries	60	This portion of the "B" Record may be used to record information for state or local government reporting or for the filer's own purposes. Payers should contact the state or local revenue departments for filing requirements. You may enter your routing and transit number (RTN) here. If this field is not used, enter blanks.
723-734	State Income Tax Withheld	12	State income tax withheld is for the convenience of the filers. This information does not need to be reported to the IRS. If not reporting state tax withheld, this field may be used as a continuation of the Special Data Entries Field. The payment amount must be right justified and unused positions must be zero-filled.
735-746	Local Income Tax Withheld	12	Local income tax withheld is for the convenience of the filers. This information does not need to be reported to the IRS. If not reporting local tax withheld, this field may be used as a continuation of the Special Data Entries Field. The payment amount must be right justified and unused positions must be zero-filled.
747-748	Combined Federal/State Code	2	Enter the valid state code for the CF/SF if this payee record is to be forwarded to a state agency as part of the CF/SF program. Part A, Sec. 11, Table 1 *Participating States and Codes.* For those payers or states not participating in this program, enter blanks.
749-750	Blank	2	Enter blanks or carriage return/line feed (CR/LF) characters.

Payee "B" Record - Record Layout Positions 544-750 for Form 1099-INT

Second TIN Notice (Optional)	Blank	Foreign Country or U.S. Possession	CUSIP Number	Blank	Special Data Entries
544	545-546	547-586	587-599	600-662	663-722

State Income Tax Withheld	Local Income Tax Withheld	Combined Federal/State Code	Blank or CR/LF
723-734	735-746	747-748	749-750

(13) Payee "B" Record - Record Layout Positions 544-750 for Form 1099-K

Field Position	Field Title	Length	General Field Description
544	Second TIN Notice (Optional)	1	Enter "2" to indicate notification by the IRS twice within three calendar years that the payee provided an incorrect name and/or TIN combination. Otherwise, enter a blank
545-546	Blank	2	Enter blanks.
547	Type of Filer Indicator	1	**Required**. Enter the appropriate indicator from the following table. **Usage** / **Indicator** Payment Settlement Entity (PSE) / 1 Electronic Payment Facilitator (EPF)/Other third party / 2
548	Type of Payment Indicator	1	**Required**. Enter the appropriate indicator from the following table. **Usage** / **Indicator** Payment Card Payment / 1 Third Party Network Payment / 2
549-561	Number of Payment Transactions	13	**Required.** Enter the number of payment transactions. Do not include refund transactions. Right justify the information and fill unused positions with zeros.
562-564	Blank	3	Enter blanks.
565-604	Payment Settlement Entity's Name and Phone Number	40	Enter the payment settlement entity's name and phone number if different from the filer's name; otherwise, enter blanks. Left justify the information, and fill unused positions with blanks.
605-608	Merchant Category Code (MCC)	4	**Required.** Enter the Merchant Category Code (MCC). All MCCs must contain four numeric characters. If no code is provided, zero fill.
609-662	Blank	54	Enter blanks.

(13) Payee "B" Record - Record Layout Positions 544-750 for Form 1099-K

Field Position	Field Title	Length	General Field Description
663-722	Special Data Entries	60	This portion of the "B" Record may be used to record information for state or local government reporting or for the filer's own purposes. Payers should contact the state or local revenue departments for filing requirements. You may enter your routing and transit number (RTN) here. If this field is not used, enter blanks.
723-734	State Income Tax Withheld	12	State income tax withheld is for the convenience of the filers. This information does not need to be reported to the IRS. If not reporting state tax withheld, this field may be used as a continuation of the Special Data Entries Field. The payment amount must be right justified and unused positions must be zero-filled.
735-746	Local Income Tax Withheld	12	Local income tax withheld is for the convenience of the filers. This information does not need to be reported to the IRS. If not reporting local tax withheld, this field may be used as a continuation of the Special Data Entries Field. The payment amount must be right justified and unused positions must be zero-filled.
747-748	Combined Federal/ State Code	2	Enter the valid Combined Federal/State Code if this payee record is to be forwarded to a state agency as part of the CF/SF Program. Part A, Sec. 11, Table 1 *Participating States and Codes.* For those payers or states not participating in this program, enter blanks.
749-750	Blank	2	Enter blanks or carriage return/line feed (CR/LF) characters.

Payee "B" Record - Record Layout Positions 544-750 for Form 1099-K

Second TIN Notice (Optional)	Blank	Type of Filer Indicator	Type of Payment Indicator	Number of Payment Transactions	Blank
544	545-546	547	548	549-561	562-564

Payment Settlement Entity's Name and Phone Number	Merchant Category Code (MCC)	Blank	Special Data Entries	State Income Tax Withheld	Local Income Tax Withheld
565-604	605-608	609-662	663-722	723-734	735-746

Combined Federal/State Code	Blank or CR/LF
747-748	749-750

(14) Payee "B" Record - Record Layout Positions 544-750 for Form 1099-LTC

Field Position	Field Title	Length	General Field Description
544-546	Blank	3	Enter blanks.
547	Type of Payment Indicator	1	Enter the appropriate indicator from the following table; otherwise, enter blanks. **Usage** / **Indicator** Per diem / 1 Reimbursed amount / 2
548-556	Social Security Number of Insured	9	**Required**. Enter the Social Security Number of the insured.
557-596	Name of Insured	40	**Required**. Enter the name of the insured.
597-636	Address of Insured	40	**Required.** Enter the address of the insured. The street address should include number, street, apartment or suite number (or PO Box if mail is not delivered to street address). Do not input any data other than the payee's address. Left justify the information and fill unused positions with blanks. For U.S. addresses, the payee city, state, and ZIP Code must be reported as a 40-, 2-,and 9-position field, respectively. Filers must adhere to the correct format for the insured's city, state, and ZIP Code. For foreign addresses, filers may use the insured's city, state, and ZIP Code as a continuous 51-position field. Enter information in the following order: city, province or state, postal code, and the name of the country. When reporting a foreign address, the Foreign Country Indicator in position 247 must contain a "1" (one).
637-676	City of Insured	40	**Required.** Enter the city, town, or post office. Left justify the information and fill unused positions with blanks. Enter APO or FPO, if applicable. Do not enter state and ZIP Code information in this field. Left justify the information and fill unused positions with blanks.
677-678	State of Insured	2	**Required.** Enter the valid U.S. Postal Service state abbreviations for states or the appropriate postal identifier (AA, AE, or AP). Refer to Part A, Sec. 12, Table 2, *State & U.S.Territory Abbreviations.*
679-687	ZIP Code of Insured	9	**Required**. Enter the valid nine-digit ZIP Code assigned by the U.S. Postal Service. If only the first five-digits are known, left justify information and fill the unused positions with blanks. For foreign countries, alpha characters are acceptable as long as the filer has entered a "1" (one) in the Foreign Country Indicator, located in position 247 of the "B" Record.

(14) Payee "B" Record - Record Layout Positions 544-750 for Form 1099-LTC

Field Position	Field Title	Length	General Field Description
688	Status of Illness Indicator (Optional)	1	Enter the appropriate code from the table below to indicate the status of the illness of the insured; otherwise, enter blank. **Usage** / **Indicator** Chronically ill: 1 Terminally ill: 2
689-696	Date Certified (Optional)	8	Enter the latest date of a doctor's certification of the status of the insured's illness. The format of the date is YYYYMMDD (for example, January 5, 2014, would be 20140105). Do not enter hyphens or slashes.
697	Qualified Contract Indicator (Optional)	1	Enter a "1" (one) if benefits were from a qualified long-term care insurance contract; otherwise, enter a blank.
698-722	Blank	25	Enter blanks.
723-734	State Income Tax Withheld	12	State income tax withheld is for the convenience of the filers. This information does not need to be reported to the IRS. Right-justify the information and fill unused positions with zeros.
735-746	Local Income Tax Withheld	12	Local income tax withheld is for the convenience of the filers. This information does not need to be reported to the IRS. The payment amount must be right-justified and unused positions zero filled.
747-748	Blank	2	Enter blanks.
749-750	Blank	2	Enter blanks or carriage return/line feed (CR/LF) characters.

Payee "B" Record - Record Layout Positions 544-750 for Form 1099-LTC

Blank	Type of Payment Indicator	Social Security Number of Insured	Name of Insured	Address of Insured	City of Insured
544-546	547	548-556	557-596	597-636	637-676
State of Insured	ZIP Code of Insured	Status of Illness Indicator (Optional)	Date Certified (Optional)	Qualified Contract Indicator (Optional)	Blank
677-678	679-687	688	689-696	697	698-722
State Income Tax Withheld	Local Income Tax Withheld	Blank	Blank or CR/LF		
723-734	735-746	747-748	749-750		

(15) Payee "B" Record - Record Layout Positions 544-750 for Form 1099-MISC

Field Position	Field Title	Length	General Field Description
544	Second TIN Notice (Optional)	1	Enter "2" (two) to indicate notification by the IRS twice within three calendar years that the payee provided an incorrect name and/or TIN combination; otherwise, enter a blank.
545-546	Blank	2	Enter blanks.
547	Direct Sales Indicator (See Note)	1	Enter a "1" (one) to indicate sales of $5,000 or more of consumer products to a person on a buy-sell, deposit-commission, or any other commission basis for resale anywhere other than in a permanent retail establishment. Otherwise, enter a blank. Note: If reporting a direct sales indicator only, use Type of Return "A" in Field Positions 26- 27, and Amount Code 1 in Field Position 28 of the Payer "A" Record. All payment amount fields in the Payee "B" Record will contain zeros.
548-662	Blank	115	Enter blanks.
663-722	Special Data Entries	60	This portion of the "B" Record may be used to record information for state or local government reporting or for the filer's own purposes. Payers should contact the state or local revenue departments for filing requirements. If this field is not used, enter blanks.

(15) Payee "B" Record - Record Layout Positions 544-750 for Form 1099-MISC

Field Position	Field Title	Length	General Field Description
723-734	State Income Tax Withheld	12	State income tax withheld is for the convenience of the filers. This information does not need to be reported to the IRS. The payment amount must be right justified and unused positions must be zero-filled. If not reporting State income tax withheld, this field may be used as a continuation of the Special Data Entries Field
735-746	Local Income Tax Withheld	12	Local income tax withheld is for the convenience of the filers. This information does not need to be reported to the IRS. The payment amount must be right justified and unused positions must be zero-filled. If not reporting local tax withheld, this field may be used as a continuation of the Special Data Entries Field.
747-748	Combined Federal/ State Code	2	Enter the valid CF/SF state code if this payee record is to be forwarded to a state agency as part of the CF/SF Program. Refer to Part A, Sec. 11, Table 1 *Participating States and Codes.* Reporting States and Codes. For those payers or states not participating in this program, enter blanks.
749-750	Blank	2	Enter blanks or carriage return/line feed (CR/LF) characters.

Payee "B" Record - Record Layout Positions 544-750 for Form 1099-MISC

Second TIN Notice (Optional)	Blank	Direct Sales Indicator	Blank	Special Data Entries	State Income Tax Withheld
544	545-546	547	548-662	663-722	723-734

Local Income Tax Withheld	Combined Federal/ State Code	Blank or CR/LF
735-746	747-748	749-750

(16) Payee "B" Record - Record Layout Positions 544-750 for Form 1099-OID

Field Position	Field Title	Length	General Field Description
544	Second TIN Notice (Optional)	1	Enter "2" (two) to indicate notification by the IRS twice within three calendar years that the payee provided an incorrect name and/or TIN combination; otherwise, enter a blank.
545-546	Blank	2	Enter blanks.

(16) Payee "B" Record - Record Layout Positions 544-750 for Form 1099-OID

Field Position	Field Title	Length	General Field Description
547-585	Description	39	**Required**. Enter the CUSIP number, if any. If there is no CUSIP number, enter the abbreviation for the stock exchange and issuer, the coupon rate, and year (must be 4-digit year) of maturity (for example, NYSE XYZ 12/2014). Show the name of the issuer if other than the payer. If fewer than 39 characters are required, left justify the information and fill unused positions with blanks
586-662	Blank	77	Enter blanks.
663-722	Special Data Entries	60	This portion of the "B" Record may be used to record information for state or local government reporting or for the filer's own purposes. Payers should contact the state or local revenue departments for filing requirements. If this field is not used, enter blanks.
723-734	State Income Tax Withheld	12	State income tax withheld is for the convenience of the filers. This information does not need to be reported to the IRS. If not reporting state tax withheld, this field may be used as a continuation of the Special Data Entries Field. The payment amount must be right justified and unused positions must be zero-filled.
735-746	Local Income Tax Withheld	12	Local income tax withheld is for the convenience of the filers. This information does not need to be reported to the IRS. If not reporting local tax withheld, this field may be used as a continuation of the Special Data Entries Field. The payment amount must be right justified and unused positions must be zero-filled.
747-748	Combined Federal/State Code	2	Enter the valid Combined Federal/State Code if this payee record is to be forwarded to a state agency as part of the CF/SF Program. Refer to Part A, Sec. 11, Table 1 *Participating States and Codes.* For those payers or states not participating in this program, enter blanks.
749-750	Blank	2	Enter blanks or carriage return/line feed (CR/LF) characters.

Payee "B" Record - Record Layout Positions 544-750 for Form 1099-OID

Second TIN Notice (Optional)	Blank	Description	Blank	Special Data Entries	State Income Tax Withheld
544	545-546	547-585	586-662	663-722	723-734

Local Income Tax Withheld	Combined Federal/ State Code	Blank or CR/LF
735-746	747-748	749-750

(17) Payee "B" Record - Record Layout Positions 544-750 for Form 1099-PATR

Field Position	Field Title	Length	General Field Description
544	Second TIN Notice (Optional)	1	Enter "2" (two) to indicate notification by the IRS twice within three calendar years that the payee provided an incorrect name and/or TIN combination; otherwise, enter a blank.
545-662	Blank	118	Enter blanks.
663-722	Special Data Entries	60	This portion of the "B" Record may be used to record information for state or local government reporting or for the filer's own purposes. Payers should contact the state or local revenue departments for filing requirements. If this field is not used, enter blanks.
723-734	State Income Tax Withheld	12	State income tax withheld is for the convenience of the filers. This information does not need to be reported to the IRS. The payment amount must be right justified and unused positions must be zero-filled. If not reporting state income tax withheld, this field may be used as a continuation of the Special Data Entries Field. The payment amount must be right justified and unused positions must be zero-filled.
735-746	Local Income Tax Withheld	12	Local income tax withheld is for the convenience of the filers. This information does not need to be reported to the IRS. If not reporting local income tax withheld, this field may be used as a continuation of the Special Data Entries Field. The payment amount must be right justified and unused positions must be zero-filled.
747-748	Combined Federal/ State Code	2	Enter the valid CF/SF state code if this payee record is to be forwarded to a state agency as part of the CF/SF Program. Refer to Part A, Sec. 11, Table 1 *Participating States and Codes.* For those payers or states not participating in this program, enter blanks.
749-750	Blank	2	Enter blanks or carriage return/line feed (CR/LF) characters.

Payee "B" Record - Record Layout Positions 544-750 For Form 1099-PATR

Second TIN Notice (Optional)	Blank	Special Data Entries	State Income Tax Withheld	Local Income Tax Withheld	Combined Federal/ State Code
544	545-662	663-722	723-734	735-746	747-748

Blank or CR/LF
749-750

(18) Payee "B" Record - Record Layout Positions 544-750 for Form 1099-Q

Field Position	Field Title	Length	General Field Description
544-546	Blank	3	Enter blanks.
547	Trustee to Trustee Transfer Indicator	1	**Required**. Enter a "1" (one) if reporting a trustee to trustee transfer; otherwise, enter a blank.
548	Type of Tuition Payment	1	**Required**. Enter the appropriate code from the table below to indicate the type of tuition payment; otherwise, enter a blank. Usage / Indicator Private program payment / 1 State program payment / 2 Coverdell ESA contribution / 3
549	Designated Beneficiary	1	**Required**. Enter a "1" (one) if the recipient is not the designated beneficiary; otherwise, enter a blank.
550-662	Blank	113	Enter blanks.
663-722	Special Data Entries	60	This portion of the "B" Record may be used to record information for state or local government reporting or for the filer's own purposes. Payers should contact the state or local revenue departments for filing requirements. If this field is not used, enter blanks.
723-748	Blank	26	Enter blanks.
749-750	Blank	2	Enter blanks or carriage return/line feed (CR/LF) characters.

Payee “B” Record - Record Layout Positions 544-750 for Form 1099-Q

Blank	Trustee to Trustee Transfer Indicator	Type of Tuition Payment	Designated Beneficiary	Blank	Special Data Entries
544-546	547	548	549	550-662	663-722

Blank	Blank or CR/LF
723-748	749-750

(19) Payee “B” Record - Record Layout Positions 544-750 for Form 1099-R

Field Position	Field Title	Length	General Field Description
544	Blank	1	Enter blank.
545-546	Distribution Code	2	**Required**. Enter at least one distribution code from the table below. More than one code may apply. If only one code is necessary, it must be entered in position 545 and position 546 will be blank. When using Code P for an IRA distribution under section 408(d)(4) of the Internal Revenue Code, the filer may also enter Code 1, 2, 4, B or J if applicable. Only three numeric combinations are acceptable, Codes 8 and 1, 8 and 2, and 8 and 4, on one return. These three combinations can be used only if both codes apply to the distribution being reported. If more than one numeric code is applicable to different parts of a distribution, report two separate “B” Records. Distribution Codes 5, 9, E, F, N, Q, R, S and T cannot be used with any other codes. Distribution Code G may be used with Distribution Code 4 only if applicable. Distribution Code K is valid with Code 1, 2, 4, 7, 8, or G.

(19) Payee "B" Record - Record Layout Positions 544-750 for Form 1099-R

Field Position	Field Title	Length	General Field Description
For a detailed explanation of distribution codes see the 2014 Instructions for Forms 1099-R and 5498. See the chart at the end of this record layout for a diagram of valid combinations of Distribution Codes.			

Category	Code
*Early distribution, no known exception (in most cases, under age 59½)	1
*Early distribution, exception applies (under age 59½)	2
*Disability	3
*Death	4
*Prohibited transaction	5
Section 1035 exchange (a tax-free exchange of life insurance, annuity, qualified long-term care insurance, or endowment contracts)	6
*Normal distribution	7
*Excess contributions plus earnings/excess deferrals (and/or earnings) taxable in 2014	8
Cost of current life insurance protection (premiums paid by a trustee or custodian for current insurance protection)	9
May be eligible for 10-year tax option	A
Designated Roth account distribution	B

(19) Payee "B" Record - Record Layout Positions 544-750 for Form 1099-R

Field Position	Field Title	Length	General Field Description
545-546 (cont.)	Distribution Code	2	

Category	Code
Annuity payments from nonqualified annuity payments and distributions from life insurance contracts that may be subject to tax under section 1411	D
Distribution under Employee Plans Compliance Resolution System (EPCRS)	E
Charitable gift annuity	F
Direct rollover and rollover contribution	G
Direct rollover of distribution from a designated Roth account to a Roth IRA	H
Early distribution from a Roth IRA. (This code may be used with a Code 8 or P)	J
Distribution of IRA assets not having a readily available FMV. Optional for TY2014/PY2015	K
Loans treated as deemed distributions under section 72(p)	L
Recharacterized IRA contribution made for 2014	N
*Excess contributions plus earnings/excess deferrals taxable for 2013	P
Qualified distribution from a Roth IRA. (Distribution from a Roth IRA when the 5-year holding period has been met, and the recipient has reached 59½, has died, or is disabled.)	Q
Recharacterized IRA contribution made for 2013	R
*Early distribution from a SIMPLE IRA in first 2 years no known exceptions.	S
Roth IRA distribution exception applies because participant has reached 59½, died or is disabled, but it is unknown if the 5-year period has been met.	T
Distribution from ESOP under Section 404(k).	U
Charges or payments for purchasing qualified long-term care insurance contracts under combined arrangements	W

*If reporting a traditional IRA, SEP, or SIMPLE distribution or a Roth conversion, use the IRA/SEP/SIMPLE Indicator of "1" (one) in position 548 of the Payee "B" Record.

Note: The trustee of the first IRA must report the recharacterization as a distribution on Form 1099-R (and the original contribution and its character on Form 5498).

547	Taxable Amount Not Determined Indicator	1	Enter "1" (one) only if the taxable amount of the payment entered for Payment Amount Field 1 (Gross distribution) of the "B" Record cannot be computed; otherwise, enter a blank. (If the Taxable Amount Not Determined Indicator is used, enter "0s" [zeros] in Payment Amount Field 2 of the Payee "B" Record.) Please make every effort to compute the taxable amount.

(19) Payee "B" Record - Record Layout Positions 544-750 for Form 1099-R

Field Position	Field Title	Length	General Field Description
548	IRA/SEP/SIMPLE Indicator	1	Enter "1" (one) for a traditional IRA, SEP, or SIMPLE distribution or Roth conversion; otherwise, enter a blank. If the IRA/SEP/SIMPLE Indicator is used, enter the amount of the Roth conversion or distribution in Payment Amount Field A of the Payee "B" Record. Do not use the indicator for a distribution from a Roth or for an IRA recharacterization. Note: For Form 1099-R, generally, report the Roth conversion or total amount distributed from a traditional IRA, SEP, or SIMPLE in Payment Amount Field A (traditional IRA/SEP/SIMPLE distribution or Roth conversion), as well as Payment Amount Field 1 (Gross Distribution) of the "B" Record. Refer to the 2014 Instructions for Forms 1099-R and 5498 for exceptions (Box 2a instructions).
549	Total Distribution Indicator	1	Enter a "1" (one) only if the payment shown for Distribution Amount Code 1 is a total distribution that closed out the account; otherwise, enter a blank. Note: A total distribution is one or more distributions within one tax year in which the entire balance of the account is distributed. Any distribution that does not meet this definition is not a total distribution.
550-551	Percentage of Total Distribution	2	Use this field when reporting a total distribution to more than one person, such as when a participant is deceased and a payer distributes to two or more beneficiaries. Therefore, if the percentage is 100, leave this field blank. If the percentage is a fraction, round off to the nearest whole number (for example, 10.4 percent will be 10 percent; 10.5 percent will be 11 percent). Enter the percentage received by the person whose TIN is included in positions 12-20 of the "B" Record. This field must be right justified, and unused positions must be zero-filled. If not applicable, enter blanks. Filers are not required to enter this information for any IRA distribution or for direct rollovers.
552-555	First Year of Designated Roth Contribution	4	Enter the first year a designated Roth contribution was made in YYYY format. If the date is unavailable, enter blanks.
556-662	Blank	107	Enter blanks.
663-722	Special Data Entries	60	This portion of the "B" Record may be used to record information for state or local government reporting or for the filer's own purposes. Payers should contact the state or local revenue departments for filing requirements. If this field is not used, enter blanks.
723-734	State Income Tax Withheld	12	The payment amount must be right justified and unused positions must be zero-filled. State income tax withheld is for the convenience of filers. This information does not need to be reported to the IRS. If not reporting state tax withheld, this field may be used as a continuation of the Special Data Entries Field.

(19) Payee "B" Record - Record Layout Positions 544-750 for Form 1099-R

Field Position	Field Title	Length	General Field Description
735-746	Local Income Tax Withheld	12	Local income tax withheld is for the convenience of filers. This information does not need to be reported to the IRS. If not reporting local tax withheld, this field may be used as a continuation of the Special Data Entries Field. The payment amount must be right justified and unused positions must be zero-filled.
747-748	Combined Federal/ State Code	2	Enter the valid CF/SF state code If this payee record is to be forwarded to a state agency as part of the CF/SF Program. Refer to Part A, Sec. 11, Table 1 *Participating States and Codes*. Enter blanks for payers or states not participating in this program.
749-750	Blank	2	Enter blanks or carriage return/line feed (CR/LF) characters.

FORM 1099-R DISTRIBUTION CODE CHART 2014

POSITION 546

POSITION 545	blank	1	2	3	4	5	6	7	8	9	A	B	D	E	F	G	H	J	K	L	N	P	Q	R	S	T	U	W
1	X								X			X	X						X	X		X						
2	X								X			X	X						X			X						
3	X												X															
4	X								X		X	X	X			X	X		X	X		X						
5	X																											
6	X																											X
7	X										X	X	X						X									
8	X	X	X		X							X						X	X									
9	X																											
A					X			X																				
B	X	X	X		X			X	X							X				X		X					X	
D		X	X	X	X			X																				
E	X																											
F	X																											
G	X				X							X							X									
H	X				X																							
J	X								X													X						
K		X	X		X			X	X							X												
L	X	X			X							X																
N	X																											
P	X	X	X		X							X						X										
Q	X																											
R	X																											
S	X																											
T	X																											
U	X											X																
W	X						X																					

X – Denotes valid combinations

Payee "B" Record - Record Layout Positions 544-750 for Form 1099-R

Blank	Distribution Code	Taxable Amount Not Determined Indicator	IRA/SEP/ SIMPLE Indicator	Total Distribution Indicator	Percentage of Total Distribution
544	545-546	547	548	549	550-551
First Year of Designated Roth Contribution	Blank	Special Data Entries	State Income Tax Withheld	Local Income Tax Withheld	Combined Federal/State Code
552-555	556-662	663-722	723-734	735-746	747-748
Blank or CR/LF					
749-750					

(20) Payee "B" Record - Record Layout Positions 544-750 for Form 1099-S

Field Position	Field Title	Length	General Field Description
544-546	Blank	3	Enter blanks.
547	Property or Services Indicator	1	**Required**. Enter "1" (one) if the transferor received or will receive property (other than cash and consideration treated as cash in computing gross proceeds) or services as part of the consideration for the property transferred; otherwise, enter a blank.
548-555	Date of Closing	8	**Required**. Enter the closing date in the format YYYYMMDD (for example, January 5, 2014 would be 20140105). Do not enter hyphens or slashes.
556-594	Address or Legal Description	39	**Required**. Enter the address of the property transferred (including city, state, and ZIP Code). If the address does not sufficiently identify the property, also enter a legal description, such as section, lot, and block. For timber royalties, enter "TIMBER." If fewer than 39 positions are required, left-justify the information and fill unused positions with blanks.
595-662	Blank	68	Enter blanks.

(20) Payee "B" Record - Record Layout Positions 544-750 for Form 1099-S

Field Position	Field Title	Length	General Field Description
663-722	Special Data Entries	60	This portion of the "B" Record may be used to record information for state or local government reporting or for the filer's own purposes. Payers should contact the state or local revenue departments for filing requirements. If this field is not used, enter blanks.
723-734	State Income Tax Withheld	12	State income tax withheld is for the convenience of the filers. This information does not need to be reported to the IRS. If not reporting state tax withheld, this field may be used as a continuation of the Special Data Entries Field. The payment amount must be right justified and unused positions must be zero-filled.
735-746	Local Income Tax Withheld	12	Local income tax withheld is for the convenience of the filers. This information does not need to be reported to the IRS. If not reporting local tax withheld, this field may be used as a continuation of the Special Data Entries Field. The payment amount must be right justified and unused positions must be zero-filled.
747-748	Blank	2	Enter blanks.
749-750	Blank	2	Enter blanks or carriage return/line feed (CR/LF) characters.

Payee "B" Record - Record Layout Positions 544-750 for Form 1099-S

Blank	Property or Services Indicator	Date of Closing	Address or Legal Description	Blank	Special Data Entries
544-546	547	548-555	556-594	595-662	663-722

State Income Tax Withheld	Local Income Tax Withheld	Blank	Blank or CR/LF
723-734	735-746	747-748	749-750

(21) Payee "B" Record - Record Layout Positions 544-750 for Form 1099-SA

Field Position	Field Title	Length	General Field Description
544	Blank	1	Enter blank.

(21) Payee "B" Record - Record Layout Positions 544-750 for Form 1099-SA

<table>
<tr><th>Field Position</th><th>Field Title</th><th>Length</th><th>General Field Description</th></tr>
<tr><td>545</td><td>Distribution Code</td><td>1</td><td>Required. Enter the applicable code from the table below to indicate the type of payment.
<table>
<tr><th>Category</th><th>Code</th></tr>
<tr><td>Normal distribution</td><td>1</td></tr>
<tr><td>Excess contribution</td><td>2</td></tr>
<tr><td>Disability</td><td>3</td></tr>
<tr><td>Death distribution other than code 6 (This includes distributions to a spouse, nonspouse, or estate beneficiary in the year for death and to an estate after the year of death.)</td><td>4</td></tr>
<tr><td>Prohibited transaction</td><td>5</td></tr>
<tr><td>Death distribution after the year of death to a nonspouse beneficiary. (Do not use for a distribution to an estate.)</td><td>6</td></tr>
<tr><td></td><td></td></tr>
</table></td></tr>
<tr><td>546</td><td>Blank</td><td>1</td><td>Enter a blank.</td></tr>
<tr><td>547</td><td>Medicare Advantage MSA Indicator</td><td>1</td><td>Enter "1" (one) if distributions are from a Medicare Advantage MSA; otherwise, enter a blank.</td></tr>
<tr><td>548</td><td>HSA Indicator</td><td>1</td><td>Enter "1" (one) if distributions are from a HSA; otherwise, enter a blank.</td></tr>
<tr><td>549</td><td>Archer MSA Indicator</td><td>1</td><td>Enter "1" (one) if distributions are from an Archer MSA; otherwise, enter a blank.</td></tr>
<tr><td>550-662</td><td>Blank</td><td>113</td><td>Enter blanks.</td></tr>
<tr><td>663-722</td><td>Special Data Entries</td><td>60</td><td>This portion of the "B" Record may be used to record information for state or local government reporting or for the filer's own purposes. Payers should contact the state or local revenue departments for filing requirements. If this field is not used, enter blanks.</td></tr>
<tr><td>723-734</td><td>State Income Tax Withheld</td><td>12</td><td>The payment amount must be right justified and unused positions must be zero-filled. State income tax withheld is for the convenience of the filers. This information does not need to be reported to the IRS. If not reporting state tax withheld, this field may be used as a continuation of the Special Data Entries Field. The payment amount must be right justified and unused positions must be zero-filled.</td></tr>
</table>

(21) Payee "B" Record - Record Layout Positions 544-750 for Form 1099-SA

Field Position	Field Title	Length	General Field Description
735-746	Local Income Tax Withheld	12	Local income tax withheld is for the convenience of the filers. This information does not need to be reported to the IRS. If not reporting local tax withheld, this field may be used as a continuation of the Special Data Entries Field. The payment amount must be right justified and unused positions must be zero-filled.
747-748	Blank	2	Enter blanks.
749-750	Blank	2	Enter blanks or carriage return/line feed (CR/LF) characters.

Payee "B" Record - Record Layout Positions 544 -750 for Form 1099-SA

Blank	Distribution Code	Blank	Medicare Advantage MSA Indicator	HSA Indicator	Archer MSA Indicator
544	545	546	547	548	549
Blank	Special Data Entries	State Income Tax Withheld	Local Income Tax Withheld	Blank	Blank or CR/LF
550-662	663-722	723-734	735-746	747-748	749-750

(22) Payee "B" Record - Record Layout Positions 544-750 for Form 3921

Field Position	Field Title	Length	General Field Description
544-546	Blank	3	Enter blanks.
547-554	Date Option Granted	8	**Required**. Enter the date the option was granted as YYYYMMDD (for example, January 5, 22014 would be 20140105); otherwise, enter blanks.
555-562	Date Option Exercised	8	**Required**. Enter the date the option was exercised as YYYYMMDD (for example. January 5, 2014 would be 20140105); otherwise, enter blanks.
563-570	Number of Shares Transferred	8	**Required**. Enter the number of shares transferred. Report whole numbers only, using standard rounding rules as necessary. Right justify the information and fill unused positions with zeros.
571-574	Blank	4	Enter blanks.
575-614	If Other Than Transferor Information	40	Enter other than transferor information, left justify the information and fill unused positions with blanks.

(22) Payee "B" Record - Record Layout Positions 544-750 for Form 3921

Field Position	Field Title	Length	General Field Description
615-662	Blank	48	Enter blanks.
663-722	Special Data Entries Field	60	This portion of the "B" Record may be used to record information for state or local government reporting or for the filer's own purposes. Payers should contact the state or local revenue departments for filing requirements. If this field is not used, enter blanks.
723-748	Blank	26	Enter blanks.
749-750	Blank	2	Enter blanks or carriage return/line feed (CR/LF) characters.

Payee "B" Record - Record Layout Positions 544-750 for Form 3921

Blank	Date Option Granted	Date Option Exercised	Number of Shares Transferred	Blank	If Other Than Transferor Information
544-546	547-554	555-562	563-570	571-574	575-614

Blank	Special Data Entries	Blank	Blank or CR/LF
615-662	663-722	723-748	749-750

(23) Payee "B" Record - Record Layout Positions 544-750 for Form 3922

Field Position	Field Title	Length	General Field Description
544-546	Blank	3	Enter blanks.
547-554	Date Option Granted to Transferor	8	**Required**. Enter the date the option was granted to the transferor as YYYYMMDD (for example, January 5, 2014 would be 20140105); otherwise, enter blanks.
555-562	Date Option Exercised by Transferor	8	**Required**. Enter the date the option was exercised by the transferor as YYYYMMDD (for example, January 5, 2014 would be 20140105); otherwise, enter blanks.
563-570	Number of Shares Transferred	8	**Required**. Enter the number of shares transferred. Report whole numbers only, using standard rounding rules as necessary. Right-justify the information and fill unused positions with zeros.
571-578	Date Legal Title Transferred by Transferor	8	**Required**. Enter the date the legal title was transferred by the transferor as YYYYMMDD (for example, January 5, 2014 would be 20140105); otherwise, enter blanks.
579-662	Blank	84	Enter blanks.

(23) Payee "B" Record - Record Layout Positions 544-750 for Form 3922

Field Position	Field Title	Length	General Field Description
663-722	Special Data Entry Field	60	This portion of the "B" Record may be used to record information for state or local government reporting or for the filer's own purposes. Payers should contact the state or local revenue departments for filing requirements. If this field is not used, enter blanks.
723-748	Blank	26	Enter blanks.
749-750	Blank	2	Enter blanks or carriage return/line feed (CR/LF) characters.

Payee "B" Record - Record Layout Positions 544-750 for Form 3922

Blank	Date Option Granted to Transferor	Date Option Exercised by Transferor	Number of Shares Transferred	Date Legal Title Transferred by Transferor	Blank
544-546	547-554	555-562	563-570	571-578	579-662

Special Data Entries	Blank	Blank or CR/LF
663-722	723-748	749-750

(24) Payee "B" Record - Record Layout Positions 544-750 for Form 5498

Field Position	Field Title	Length	General Field Description
544-546	Blank	3	Enter blanks.
547	IRA Indicator (Individual Retirement Account)	1	**Required**, if applicable. Enter "1" (one) if reporting a rollover (Amount Code 2) or Fair Market Value (Amount Code 5) for an IRA; otherwise, enter a blank.
548	SEP Indicator (Simplified Employee Pension)	1	**Required**, if applicable. Enter "1" (one) if reporting a rollover (Amount Code 2) or Fair Market Value (Amount Code 5) for a SEP; otherwise, enter a blank.
549	SIMPLE Indicator (Savings Incentive Match Plan for Employees)	1	**Required**, if applicable. Enter "1" (one) if reporting a rollover (Amount Code 2) or Fair Market Value (Amount Code 5) for a SIMPLE; otherwise, enter a blank.
550	Roth IRA Indicator	1	**Required**, if applicable. Enter "1" (one) if reporting a rollover (Amount Code 2) or Fair Market Value (Amount Code 5) for a Roth IRA; otherwise, enter a blank.
551	RMD Indicator	1	**Required**. Enter "1" (one) if reporting RMD for 2015; otherwise, enter a blank.
552-555	Year of Postponed Contribution	4	Enter the year in YYYY format; otherwise, enter blanks.

(24) Payee "B" Record - Record Layout Positions 544-750 for Form 5498

Field Position	Field Title	Length	General Field Description
556-557	Postponed Contribution Code	2	**Required**, if applicable. Enter the code from the table below: Category: Federally Designated Disaster Area — Code: FD Category: Public Law — Code: PL Category: Executive Order — Code: EO
558-563	Postponed Contribution Reason	6	**Required**, if applicable. Enter the federally declared disaster area, public law number or executive order number under which the postponed contribution is being issued; otherwise, enter blanks.
564-565	Repayment Code	2	**Required**. Enter the two-character alpha Repayment Code; otherwise, enter blanks. Category: Qualified Reservist Distribution — Code: QR Category: Federally Designated Disaster Distribution — Code: DD
566-573	RMD Date	8	Enter the date by which the RMD amount must be distributed to avoid the 50% excise tax. Format the date as YYYYMMDD (for example, January 5, 2014, as 20140105); otherwise, enter blanks.
574-575	Codes	2	Equal to one alpha character or two alpha characters or blank. Valid characters are: • Two-character combinations can consist of A, B, C, D, E, F, and G. • Valid character H cannot be present with any other characters. Note: Optional reporting for TY2014/PY2015
576-662	Blank	87	Enter Blanks.
663-722	Special Data Entries	60	This portion of the "B" Record may be used to record information for state or local government reporting or for the filer's own purposes. Payers should contact the state or local revenue departments for filing requirements. If this field is not used, enter blanks.
723-746	Blank	24	Enter blanks.
747-748	Combined Federal/ State Code	2	Enter the valid CF/SF state code if this payee record is to be forwarded to a state agency as part of the CF/SF Program. Refer to Part A, Sec. 11, Table 1 *Participating States and Codes.* For those payers or states not participating in this program, enter blanks.
749-750	Blank	2	Enter blanks or carriage return/line feed (CR/LF) characters.

Payee "B" Record - Record Layout Positions 544-750 for Form 5498

Blank	IRA Indicator	SEP Indicator	SIMPLE Indicator	Roth IRA Indicator	RMD Indicator
544-546	547	548	549	550	551

Year of Postponed Contribution	Postponed Contribution Code	Postponed Contribution Reason	Repayment Code	RMD Date	Codes
552-555	556-557	558-563	564-565	566-573	574-575

Blank	Special Data Entries	Blank	Combined Federal/State Code	Blank or CR/LF
576-662	663-722	723-746	747-748	749-750

---

(25) Payee "B" Record - Record Layout Positions 544-750 for Form 5498-ESA

Field Position	Field Title	Length	General Field Description
544-662	Blank	119	Enter blanks.
663-722	Special Data Entries	60	This portion of the "B" Record may be used to record information for state or local government reporting or for the filer's own purposes. Payers should contact the state or local revenue departments for filing requirements. If this field is not used, enter blanks.
723-748	Blank	26	Enter blanks.
749-750	Blank	2	Enter blanks or carriage return/line feed (CR/LF) characters.

Payee "B" Record - Record Layout Positions 544-750 for Form 5498-ESA

Blank	Special Data Entries	Blank	Blank or CR/LF
544-662	663-722	723-748	749-750

---

(26) Payee "B" Record - Record Layout Positions 544-750 for Form 5498-SA

Field Position	Field Title	Length	General Field Description
544-546	Blank	3	Enter blanks.

547	Medicare Advantage MSA Indicator	1	Enter “1” (one) for a Medicare Advantage MSA; otherwise, enter a blank.
548	HSA Indicator	1	Enter “1” (one) for an HSA; otherwise, enter a blank.
549	Archer MSA Indicator	1	Enter “1” (one) for an Archer MSA; otherwise, enter a blank.
550-662	Blank	113	Enter blanks.
663-722	Special Data Entries	60	This portion of the “B” Record may be used to record information for state or local government reporting or for the filer’s own purposes. Payers should contact the state or local revenue departments for filing requirement; otherwise, enter blanks.
723-748	Blank	26	Enter blanks.
749-750	Blank	2	Enter blanks or carriage return/line feed (CR/LF) characters.

Payee “B” Record - Record Layout Positions 544-750 for Form 5498-SA

Blank	Medicare Advantage MSA Indicator	HSA Indicator	Archer MSA Indicator	Blank	Special Data Entries
544-546	547	548	549	550-662	663-722

Blank	Blank or CR/LF
723-748	749-750

(27) Payee "B" Record - Record Layout Positions 544-750 for Form W-2G

Field Position	Field Title	Length	General Field Description
544-546	Blank	3	Enter blanks.
547	Type of Wager Code	1	**Required**. Enter the applicable type of wager code from the table below.
			<table><tr><th>Category</th><th>Code</th></tr><tr><td>Horse race track (or off-track betting of a horse track nature)</td><td>1</td></tr><tr><td>Dog race track (or off-track betting of a dog track nature)</td><td>2</td></tr><tr><td>Jai-alai</td><td>3</td></tr><tr><td>State-conducted lottery</td><td>4</td></tr><tr><td>Keno</td><td>5</td></tr><tr><td>Bingo</td><td>6</td></tr><tr><td>Slot machines</td><td>7</td></tr><tr><td>Poker Winnings</td><td>8</td></tr><tr><td>Any other type of gambling winnings</td><td>9</td></tr></table>
548-555	Date Won	8	**Required**. Enter the date of the winning transaction in the format YYYYMMDD (for example, January 5, 2014, would be 20140105). This is not the date the money was paid, if paid after the date of the race (or game). Do not enter hyphens or slashes.
556-570	Transaction	15	**Required**. For state-conducted lotteries, enter the ticket or other identifying number. For keno, bingo, and slot machines, enter the ticket or card number (and color, if applicable), machine serial number, or any other information that will help identify the winning transaction. For all others, enter blanks.
571-575	Race	5	If applicable, enter the race (or game) relating to the winning ticket; otherwise, enter blanks.
576-580	Cashier	5	If applicable, enter the initials or number of the cashier making the winning payment; otherwise, enter blanks.
581-585	Window	5	If applicable, enter the window number or location of the person paying the winning payment; otherwise, enter blanks.

(27) Payee "B" Record - Record Layout Positions 544-750 for Form W-2G

Field Position	Field Title	Length	General Field Description
586-600	First ID	15	For other than state lotteries, enter the first identification number of the person receiving the winning payment; otherwise, enter blanks.
601-615	Second ID	15	For other than state lotteries, enter the second identification number of the person receiving the winnings; otherwise, enter blanks.
616-662	Blank	47	Enter blanks.
663-722	Special Data Entries	60	This portion of the "B" Record may be used to record information for state or local government reporting or for the filer's own purposes. Payers should contact the state or local revenue departments for filing requirements. If this field is not used, enter blanks.
723-734	State Income Tax Withheld	12	State income tax withheld is for the convenience of the filers. This information does not need to be reported to the IRS. If not reporting state tax withheld, this field may be used as a continuation of the Special Data Entries field. The payment amount must be right-justified and unused positions must be zero-filled.
735-746	Local Income Tax Withheld	12	Local income tax withheld is for the convenience of the filers. This information does not need to be reported to the IRS. If not reporting local tax withheld, this field may be used as a continuation of the Special Data Entries field. The payment amount must be right justified and unused positions must be zero-filled.
747-748	Blank	2	Enter blanks.
749-750	Blank	2	Enter blanks or carriage return/line feed (CR/LF) characters.

Payee "B" Record - Record Layout Positions 544-750 for Form W-2G

Blank	Type of Wager Code	Date Won	Transaction	Race	Cashier
544-546	547	548-555	556-570	571-575	576-580

Window	First ID	Second ID	Blank	Special Data Entries	State Income Tax Withheld
581-585	586-600	601-615	615-662	663-722	723-734

Local Income Tax Withheld	Blank	Blank or CR/LF
735-746	747-748	749-750

Sec. 4 End of Payer "C" Record

General Field Description

The End of Payer "C" Record consists of the total number of payees and the totals of the payment amount fields filed for each payer and/or particular type of return. The "C" Record must follow the last "B" Record for each type of return for each payer. For each "A" Record and group of "B" Records on the file, there must be a corresponding "C" Record.

The End of Payer "C" Record is a fixed length of 750 positions. The control fields are each 18 positions in length.

Record Name: End of Payer "C" Record

Field Position	Field Title	Length	General Field Description
1	Record Type	1	**Required**. Enter "C."
2-9	Number of Payees	8	**Required**. Enter the total number of "B" Records covered by the preceding "A" Record. Right-justify the information and fill unused positions with zeros.
10-15	Blank	6	Enter blanks.
16-33	Control Total 1	18	**Required**. Accumulate totals of any payment amount fields in the "B" Records into the appropriate control total fields of the "C" Record. Control totals must be right-justified and unused control total fields zero-filled. All control total fields are 18 positions in length. Each payment amount must contain U.S. dollars and cents. The right-most two positions represent cents in the payment amount fields. Do not enter dollar signs, commas, decimal points, or negative payments, except those items that reflect a loss on Form 1099-B or 1099-Q. Positive and negative amounts are indicated by placing a "+" (plus) or "-" (minus) sign in the left-most position of the payment amount field.
34-51	Control Total 2	18	
52-69	Control Total 3	18	
70-87	Control Total 4	18	
88-105	Control Total 5	18	
106-123	Control Total 6	18	
124-141	Control Total 7	18	
142-159	Control Total 8	18	
160-177	Control Total 9	18	
178-195	Control Total A	18	
196-213	Control Total B	18	
214-231	Control Total C	18	
232-249	Control Total D	18	
250-267	Control Total E	18	
268-285	Control Total F	18	
286-303	Control Total G	18	
304-499	Blank	196	Enter blanks.

Record Name: End of Payer "C" Record

Field Position	Field Title	Length	General Field Description
500-507	Record Sequence Number	8	**Required**. Enter the number of the record as it appears within the file. The record sequence number for the "T" Record will always be "1" (one), since it is the first record on the file and the file can have only one "T" Record in a file. Each record, thereafter, must be increased by one in ascending numerical sequence, that is, 2, 3, 4, etc. Right justify numbers with leading zeros in the field. For example, the "T" Record sequence number would appear as "00000001" in the field, the first "A" Record would be "00000002," the first "B" Record, "00000003," the second "B" Record, "00000004" and so on until the final record of the file, the "F" Record.
508-748	Blank	241	Enter blanks.
749-750	Blank	2	Enter blanks or carriage return/line feed (CR/LF) characters.

End of Payer "C" Record - Record Layout

Record Type	Number of Payees	Blank	Control Total 1	Control Total 2	Control Total 3
1	2-9	10-15	16-33	34-51	52-69
Control Total 4	Control Total 5	Control Total 6	Control Total 7	Control Total 8	Control Total 9
70-87	88-105	106-123	124-141	142-159	160-177
Control Total A	Control Total B	Control Total C	Control Total D	Control Total E	Control Total F
178-195	196-213	214-231	232-249	250-267	268-285
Control Total G	Blank	Record Sequence Number	Blank	Blank or CR/LF	
286-303	304-499	500-507	508-748	749-750	

Sec. 5 State Totals "K" Record

General Field Description

The State Totals "K" Record is a summary for a given payer and a given state in the Refer to Part A, Sec. 11, *Combined Federal/State Filing Program* used only when state reporting approval has been granted.

Submit a separate "K" Record for each state being reported. The "K" Record is a fixed length of 750 positions. The control total fields are each 18 positions in length.

The "K" Record contains the total number of payees and the total of the payment amount fields filed by a given payer for a given state. The "K" Record(s) must be written after the "C" Record for the related "A" Record. Refer to Part C, *File Format Diagram.*

Example: If a payer used Amount Codes 1, 3, and 6 in the "A" Record, the totals from the "B" Records coded for this state would appear in Control Totals 1, 3, and 6 of the "K" Record.

Record Name: State Totals "K" Record - Record Layout Forms 1099-B, 1099-DIV, 1099-G, 1099-INT, 1099-K, 1099-MISC, 1099-OID, 1099-PATR, 1099-R, and 5498

Field Position	Field Title	Length	General Field Description
1	Record Type	1	**Required**. Enter "K."
2-9	Number of Payees	8	**Required**. Enter the total number of "B" Records being coded for this state. Right-justify the information and fill unused positions with zeros.
10-15	Blank	6	Enter blanks.
16-33	Control Total 1	18	**Required**. Accumulate totals of any payment amount fields in the "B" Records for each state being reported into the appropriate control total fields of the appropriate "K" Record. Each payment amount must contain U.S. dollars and cents. The right-most two positions represent cents in the payment amount fields. Control totals must be right justified and unused control total fields zero filled. All control total fields are eighteen positions in length. .
34-51	Control Total 2	18	
52-69	Control Total 3	18	
70-87	Control Total 4	18	
88-105	Control Total 5	18	
106-123	Control Total 6	18	
124-141	Control Total 7	18	
142-159	Control Total 8	18	
160-177	Control Total 9	18	
178-195	Control Total A	18	
196-213	Control Total B	18	
214-231	Control Total C	18	
232-249	Control Total D	18	
250-267	Control Total E	18	
268-285	Control Total F	18	
286-303	Control Total G	18	

Record Name: State Totals "K" Record - Record Layout Forms 1099-B, 1099-DIV, 1099-G, 1099-INT, 1099-K, 1099-MISC, 1099-OID, 1099-PATR, 1099-R, and 5498

Field Position	Field Title	Length	General Field Description
304-499	Blank	196	Enter blanks.
500-507	Record Sequence Number	8	**Required**. Enter the number of the record as it appears within the file. The record sequence number for the "T" Record will always be "1" (one), since it is the first record on the file and the file can have only one "T" Record in a file. Each record, thereafter, must be increased by one in ascending numerical sequence, that is, 2, 3, 4, etc. Right justify numbers with leading zeros in the field. For example, the "T" Record sequence number would appear as "00000001" in the field, the first "A" Record would be "00000002," the first "B" Record, "00000003," the second "B" Record, "00000004" and so on through the final record of the file, the "F" Record.
508-706	Blank	199	Enter blanks.
707-724	State Income Tax Withheld Total	18	Aggregate totals of the state income tax withheld field in the Payee "B" Records; otherwise, enter blanks. (This field is for the convenience of filers.)
725-742	Local Income Tax Withheld Total	18	Aggregate totals of the local income tax withheld field in the Payee "B" Records; otherwise, enter blanks. (This field is for the convenience of filers.)
743-746	Blank	4	Enter blanks.
747-748	Combined Federal/ State Code	2	**Required**. Enter the code assigned to the state which is to receive the information. Refer to Part A. Sec. 11, Table 1, *Participating States and Codes*
749-750	Blank	2	Enter blanks or carriage return/line feed (CR/LF) characters.

State Totals "K" Record - Record Layout

Forms 1099-B, 1099-DIV,1099-G, 1099-INT, *1099-K,*

1099-MISC, 1099-OID, 1099-PATR, 1099-R, and 5498

Record Type	Number of Payees	Blank	Control Total 1	Control Total 2	Control Total 3
1	2-9	10-15	16-33	34-51	52-69
Control Total 4	Control Total 5	Control Total 6	Control Total 7	Control Total 8	Control Total 9
70-87	88-105	106-123	124-141	142-159	160-177
Control Total A	Control Total B	Control Total C	Control Total D	Control Total E	Control Total F
178-195	196-213	214-231	232-249	250-267	268-285
Control Total G	Blank	Record Sequence Number	Blank	State Income Tax Withheld Total	Local Income Tax Withheld Total
286-303	304-499	500-507	508-706	707-724	725-742
Blank	Combined Federal/State Code	Blank or CR/LF			
743-746	747-748	749-750			

Sec. 6 End of Transmission "F" Record

General Field Description

The End of Transmission "F" Record is a summary of the number of payers/payees in the entire file. This record must be written after the last "C" Record (or last "K" Record, when applicable) of the entire file.

The "F" Record is a fixed record length of 750 positions.

Record Name: End of Transmission "F" Record

Field Position	Field Title	Length	General Field Description
1	Record Type	1	**Required**. Enter "F."
2-9	Number of "A" Records	8	Enter the total number of Payer "A" Records in the entire file. Right-justify the information and fill unused positions with zeros or enter all zeros.
10-30	Zero	21	Enter zeros.
31-49	Blank	19	Enter blanks.

Record Name: End of Transmission "F" Record

Field Position	Field Title	Length	General Field Description
50-57	Total Number of Payees	8	If this total was entered in the "T" Record, this field may be blank filled. Enter the total number of Payee "B" Records reported in the file. Right-justify the information and fill unused positions with zeros.
58-499	Blank	442	Enter blanks.
500-507	Record Sequence Number	8	**Required**. Enter the number of the record as it appears within the file. The record sequence number for the "T" Record will always be "1" (one), since it is the first record on the file and the file can have only one "T" Record in a file. Each record, thereafter, must be increased by one in ascending numerical sequence, that is, 2, 3, 4, etc. Right-justify numbers with leading zeros in the field. For example, the "T" Record sequence number would appear as "00000001" in the field, the first "A" Record would be "00000002," the first "B" Record, "00000003," the second "B" Record, "00000004" and so on until the final record of the file, the "F" Record.
508-748	Blank	241	Enter blanks.
749-750	Blank	2	Enter blanks or carriage return/line feed (CR/LF) characters.

End of Transmission "F" Record - Record Layout

Record Type	Number of "A" Records	Zero	Blank	Total Number of Payees	Blank
1	2-9	10-30	31-49	50-57	58-499

Record Sequence Number	Blank	Blank or CR/LF
500-507	508-748	749-750

Part D. | Extension of Time

Sec. 1 Extension of Time

.01 Application for Extension of Time to File Information Returns (30 day automatic)

The application for extension of time to file information returns must be filed by the due date of the return for which the extension is being requested. If the payer/filer is requesting an extension for multiple form types, the extension must be requested by the earliest due date. A separate extension application is required for each payer/filer.

There are three methods for filing a request for an extension of time to file information returns:

Method	How To	Notification
Online submission of *Extension of Time to File Information Returns*	The Fill-in Form 8809 may be completed online via the FIRE Production System. Refer to Part B, Sec. 3, Connecting to the FIRE System from the Main Menu, click "Extension of Time Request" and then click "Fill-in Extension Form".	Forms 8809 completed online receive an instant acknowledgement on screen if form is completed properly and timely.
Electronic File Transmission Note: A TCC is required.	A request for an extension of time to file information returns may be filed electronically by transmitting an electronic extension file. Refer to Part D, *Extension of Time*.	Transmitters requesting an extension of time via an electronic file will receive the file status results online.
Paper submissions of Form 8809, *Application for Extension of Time to File Information Returns*	Form 8809 can be obtained on irs.gov Publication and Forms. Part A, Sec. 5, Additional Resources	**Approval letters will not be issued for original 30-day extension requests. Payer/filer will receive denial letters when applicable.**

If the request for an extension of time for extension of time to file an information return is received beyond the due date of the information return, it will be denied. For more information on extension requests and requesting an additional extension of time, see Form 8809, *Application for Extension of Time to File Information Returns*.

Note: The IRS encourages the payer community to utilize the online Fill-in Form 8809 in lieu of the paper Form 8809. When completing the online fill-in form via the FIRE Production System, a separate Form 8809 must be completed for each payer.

.02 Request for Additional Extension of Time

Title 26 CFR Chapter 1 subsection 6081-8 (d)(2) allows a payer (filer) or transmitter to request an additional 30-day extension to file information returns if the first automatic 30-day extension was granted and the additional extension is filed before the expiration of the automatic 30-day extension. The additional extension can be filed on Form 8809 or filed electronically provided that the filer faxes a Form 8809 the same day the file is transmitted to satisfy the reason and signature requirement. The online Fill-in Form 8809 cannot be used to request an additional extension of time.

.03 Extension of Time for Recipient Copies of Information Returns

Request an extension of time to furnish statements to recipients of Forms 1097, 1098 series, 1099 series, 3921, 3922, 5498 series, W-2G, W-2 series, and 1042-S by submitting a letter to the IRS with the following information:

- Payer or employer name
- TIN
- Address
- Type of return
- Specify that the extension request is to provide statements to recipients
- Reason for the delay
- Signature of payer or duly authorized person
- Filename (for Electronic File Transmission)

Send letter or fax to the following address:

Internal Revenue Service
Attention: Extension of Time Coordinator
240 Murall Drive Mail Stop 4360
Kearneysville, WV 25430
Fax: 877-477-0572 or 304-579-4105

Requests for an extension of time to furnish statements to recipients of Forms 1097, 1098 series, 1099 series, 3921, 3922, 5498 series, W-2G, W-2 series, and 1042-S are not automatically approved. If approved, an extension will allow a maximum of 30 days from the due date. The request must be postmarked no later than the date the statements are due to the recipients.

Only the filer or transmitter may sign the letter requesting the extension for recipient copies; however, if a transmitter has a contractual agreement with a payer to file extension requests on the payer's behalf, the transmitter should state so in the letter requesting the extension.

Transmitters may file a request for an extension of time for recipient copies by submitting an electronic file. A signed letter must be faxed to the IRS by the transmitter the same day as the transmission of the electronic file. A list of payer or employer names and TINs is not required to be included with the letter since the information was included in the electronic file.

When requesting an extension of time for recipient copies, be sure to include the reason an extension for the recipient copies is needed.

Note: The paper Form 8809 and the online Fill-in Form 8809 cannot be used to request an extension of time to furnish statements to recipients.

Record Layout for Extension of Time

Field Position	Field Title	Length	General Field Description
1-5	Transmitter Control Code	5	**Required**. Enter the five-character alphanumeric Transmitter Control Code (TCC) issued by the IRS. Only one TCC per file is acceptable.
Note: Positions 6 through 188 record should contain information about the payer or employer for whom the extension of time to file is being requested. Do not enter transmitter information in these fields.			
6-14	Payer TIN	9	**Required.** Enter the valid nine-digit EIN/SSN assigned to the payer or employer. Do not enter blanks, hyphens or alpha characters. All zeros, ones, twos, etc., will have the effect of an incorrect TIN. For foreign entities that are not required to have a TIN, this field may be blank; however, the Foreign Entity Indicator in position 187 must be set to "X."

Record Layout for Extension of Time

Field Position	Field Title	Length	General Field Description
15-54	Payer Name	40	**Required**. Enter the name of the payer whose TIN appears in positions 6-14. Left-justify the information and fill unused positions with blanks.
55-94	Second Payer Name	40	**Required**. If additional space is needed, this field may be used to continue name line information; otherwise, enter blanks. Example: c/o First National Bank.
95-134	Payer Address	40	**Required**. Enter the payer's address. The street address should include the number, street, apartment, suite number, or P.O. box if mail is not delivered to a street address.
135-174	Payer City	40	**Required**. Enter the payer's city, town, or post office.
175-176	Payer State	2	**Required.** Enter the payer's valid U.S. Postal Service state abbreviation. Refer to Part A, Sec. 12, Table 2, *State & U.S. Territory Abbreviations*
177-185	Payer ZIP Code	9	**Required**. Enter the payer's ZIP Code. If using a five-digit ZIP Code, left-justify the information and fill unused positions with blanks. Enter the payer's ZIP Code.
186	Document Indicator (See Note)	1	**Required**. From the table below, enter the appropriate document code that indicates the form for which an extension of time is being requested. Document / Code W-2 / 1 1097-BTC, 1098, 1098-C, 1098-E, 1098-T, 1099-A, 1099-B, 1099-C, 1099-CAP, 1099-DIV, 1099-G, 1099- H, 1099-INT, 1099-K, 1099-LTC, 1099-MISC, 1099-OID, 1099-PATR, 1099-Q, 1099-R, 1099-S, 1099-SA, 3921, 3922, or W-2G, / 2 5498 / 3 1042-S / 4 8027 / 5 5498-SA / 6 5498-ESA / 7 **Note**: Do not enter any other values in this field. Submit a separate record for each document. For example, when requesting an extension for Form 1099-INT and Form 5498 for the same payer, submit one record with "2" coded in this field and another record with "3" coded in this field. When requesting an extension for Form 1099-DIV and Form 1099-MISC for the same payer, submit one record with "2" coded in this field.
187	Foreign Entity Indicator	1	Enter "X" if the payer is a foreign entity.

Record Layout for Extension of Time

Field Position	Field Title	Length	General Field Description
188	Recipient Request Indicator	1	Enter “X” if the extension request is to furnish statements to the recipients of the information returns. Otherwise leave blank. Note: A separate file is required for this type of extension request. A file must either contain all blanks or all Xs in this field.
189-198	Blank	10	Enter Blanks
199-200	Blank	2	Enter blanks or carriage return/line feed (CR/LF) characters.

Extension of Time Record Layout

Transmitter Control Code	Payer TIN	Payer Name	Second Payer Name	Payer Address	Payer City
1-5	6-14	15-54	55-94	95-134	135-174

Payer State	Payer ZIP Code	Document Indicator	Foreign Entity Indicator	Recipient Request Indicator	Blank
175-176	177-185	186	187	188	189-198

Blank or CR/LF
199-200

Part E. | Exhibits

Exhibit 1 Name Control

The “B” record includes a field in the payee records titled, “Name Control” in which the first four characters of the payee’s last name are to be entered by the filer. If filers are unable to determine the first four characters of the last name, the Name Control Field may be left blank.

It is important to submit the “B” record with an accurate Name Control as it facilitates the identification of the payee within the IRS programs. The guidelines below are broken into organization type.

Individuals

A name control for an individual is generally the first four characters of the last name on the information return.

- The name control consists of four alpha and/or numeric characters.
- The hyphen (-) or a blank space are the only special characters allowed in the name control. These characters cannot be in the first position of the name control.
- The name control can have less, but no more than four characters. Blanks may be present only as the last three positions of the name control.
- If an individual has a hyphenated last name, the name control is the first four characters from the first of the two last names.
- For joint returns, regardless of whether the payees use the same or different last names, the name control is the first four characters of the primary payee’s last name.

Examples

Name	Name Control
Ralph Teak	TEAK
Dorothy Willow	WILL
Joe McCedar	MCCE
Brandy Cedar-Hawthorn	CEDA
Victoria Windsor-Maple	WIND
Joseph Ash & Linda Birch	ASH
Edward & Joan Maple	MAPL

Sole Proprietor

- A sole proprietor must always use his/her individual name as the legal name of the business for IRS purposes.
- The name control consists of four alpha and/or numeric characters.
- The name control can have less, but no more than four characters.
- The hyphen (-) or a blank space are the only special characters allowed in the name control. These characters cannot be in the first position of the name control.
- When the taxpayer has a true name and a trade name, the name control is the first four characters of the individual's last name.
- When an individual's two last names are hyphenated, the name control is the first four characters of the first last name.

Examples

Name	Name Control	Comment
True Name: Arthur P. Aspen Trade Name: Sunshine Restaurant	ASPE	The name control for a sole proprietor's name is the first four significant characters of the last name.
Maiden Name: Jane Smith Married Name: Jane Smith Jones	JONE	When two last names are used but are not hyphenated, the name control is the first four characters of the second last name.
Name: Jane Smith-Jones	SMIT	
Name: Elena de la Rosa	DELA	The Spanish phrases "de", "De", "del", and "de la" are part of the name control.
Name: Juan Garza Morales	GARZ	For Spanish names, when an individual has two last names, the name control is the first four characters of the first last name.
Name: Maria Lopez Moreno	LOPE	
Name: Sunny Ming Lo	LO	For last names that have only two letters the last two spaces will be "blank". Blanks may be present only as the last three positions of the name control.
Kim Van Nguyen	NGUY	Vietnamese names will often have a middle name of Van (male) or Thi (female).

Partnerships

The name control for a partnership will usually result in the following order of selection:

1. For businesses “doing business as” (dba) or with a trade name, use the first four characters of the dba or trade name.
2. If there is no business or trade name, use the first four characters of the partnership name (even if it is an individual’s name, such as in a law firm partnership).
3. Online receipt of EINs generates separate rules for the name control of partnerships.
4. Whether received online or via paper, if the first word is “The,” disregard it unless it is followed by only one other word.
5. If the EIN was assigned online (the EIN will begin with one of the following two digits: 20, 26, 27, or 45), then the name control for a partnership is developed using the first four characters of the primary name line.
6. If the first two digits of the EIN are other than 20, 26, 27, or 45, the name control for a partnership results from the trade or business name of the partnership. If there is no trade or business name, a name control results from the first four letters of a partnership name, in the case of a list of partners followed by the word partnership or an abbreviation thereof, or the last name of the first partner on the original Form SS-4, *Application for Employer Identification Number.*

Examples

Name	Name Control
Rosie’s Restaurant	ROSI
Burgandy_Olive & Cobalt_Ptrs	BURG
The Hemlock	THEH
John Willow and James Oak Partnership (EIN assigned online)	JOHN
A.S. Green_(The) Oak Tree	OAKT
K.L. Black & O. H. Brown	BLAC
Bob Orange and Carol Black_ et al. Prs. Dba The Merry Go Round	MERR

Corporations
The name control for a corporation is the first four significant characters of the corporate name.

Examples

Name	Name Control	Comment
Name: The Meadowlark Company	MEAD	Omit the word “The” when followed by more than one word.
Name: The Flamingo	THEF	Include the word “The” in the name control when followed by only one word.
Name: George Giraffe PSC	GEOR	Corporate name control rules apply if an individual name contains theabbreviations PC (Professional Corporation), SC (Small Corporation), PA (Professional Association), PS (Professional Service), or PSC (Personal Service Corporation).
Kathryn Canary Memorial Foundation	KATH	When the organization name contains the words “Fund” or “Foundation”, corporate name control rules apply.
Barbara J. Zinnia ZZ Grain	ZZGR	When an individual name and a corporate name appear, the name control is the first four characters of the corporation name.

Estates, Trusts and Fiduciaries

The name control for estates is the first four characters of the last name of the decedent. The last name of the decedent must have the word “Estate” after the first four characters in the primary name line.

The name control for trusts and fiduciaries results in the following:

1. Name controls for individual trusts are created from the first four characters of the individual’s last name.
2. For corporations set up as trusts, use the first four characters of the corporate name.
3. There are separate rules for the name control of trusts, depending on whether the EIN is an online assignment.
4. If the EIN is assigned online (the EIN will begin with one of the following two digits: 20, 26, 27, or 45), then the name control is developed using the first four characters of the first name on the primary name line. (Note: The online EIN application will begin assigning the first two digits of 46 and 47 in the future.) Ignore leading phrases such as “Trust for” or “Irrevocable Trust.”
5. If the first two digits of the EIN are other than 20, 26, 27, or 45, (46 and 47, in the future) then the name control for a trust or fiduciary account results from the name of the person in whose name the trust or fiduciary account is established.

Examples

Name	Name Control
Name: Howard J. Smith Dec’d Name Control: Howard J Smith, Estate	SMIT
Name: Howard J. Smith Dec’d Name Control: Howard J Smith, Estate (EIN assigned online)	HOWA
Name: Michael T Azalea Revocable Trust Name Control: Michael T Azalea Rvoc Tr	AZAL
Name: Sunflower Company Employee Benefit Trust Name Control: Sunflower Company Employee Benefit Trust	SUNF
Jonathan Periwinkle Memory Church Irrevocable Trust (EIN assigned online)	PERI
Trust for the benefit of Bob Jones (EIN assigned online)	BOBJ
Trust for the benefit of Bob Jones	JONE

Other Organizations

Compliance with the following will facilitate the computer programs in identifying the correct name control:

1. The only organization, which you will always abbreviate, is Parent Teachers Association (PTA). The name control will be “PTA” plus the first letter of the name of the state in which the PTA is located.
2. The name control for a local or post number is the first four characters of the national title.
3. Use the name control of the national organization name if there is a Group Exemption Number (GEN).
4. For churches and their subordinates (for example nursing homes, hospitals), the name control consists of the first four characters of the legal name of the church or subordinate.
5. If the organization’s name indicates a political organization, use the individual’s name as the name control.
6. The words Kabushiki Kaisha or Gaisha are the Japanese translation of the words “stock company” or “corporation.” Therefore, if these words appear in a name line, these words would move to the end of the name where the word corporation” would normally appear.

Examples

Name	Name Control
Name: Parent Teachers Association Congress of Georgia	PTAG
Church of All	CHUR
Committee to Elect Patrick Dole:	PATR
Green Door Kabushik Kaisha	GREE

Exhibit 2 Publication 1220 Tax Year 2014 Updates

Date	Publication	Update
10/7/2014	Publication 1220 Tax Year 2014	Page 10 #13 – Form 1099-R, Distributions From Pensions, Annuities, Retirement or Profit-Sharing Plans, IRAs, Insurance Contracts, etc. Updated first bullet: • Payee "B" Record – Add Code K, Distribution of IRA assets not having a readily available FMV Code is valid with 1, 2, 4, 7, 8, or G. Optional reporting for TY2014/PY2015. Page 97 - Updated Form 1099-R Distribution Chart 2014 to place an x on Row K Column 8 and Column K row 8.
10/7/2014	Publication 1220 Tax Year 2014	Page 11 #17 - New password security requirements for the FIRE System. Passwords must be 8-20 characters and include at least one uppercase and one lowercase letter, one number, and one special characters #?!@$%^&*.,'. The effective dates for the new Password requirements are: • November 3, 2014 FIRE Test System • January 20, 2015 FIRE Production System Page 28 - Connecting to the FIRE System Chart – Updated chart to list new password security requirements for the FIRE System.
10/7/2014	Publication 1220 Tax Year 2014	Page 117 – Sec 1 .02 Request for Additional Extension of Time - Revised IRC Code to 6081-8 (d)(2) and removed last sentence stating requests for additional time are granted only in cases of extreme hardship and catastrophic event.
10/15/2014	Publication 1220 Tax Year 2014	Page 93 – Payee "B" Record for Form 1099-R Field Position 545-546 – Updated to state Distribution Code K is valid with Code 1, 2, 4, 7, 8, or G."
11/7/2014	Publication 1220 Tax Year 2014	Page 10 #7 Updated to state: Amount Code A, Market discount – field positions 163-174 of the Payee "B" Record. Amount Code B, Bond Premium – field positions 175-186 of the Payee "B" Record.
11/7/2014	Publication 1220 Tax Year 2014	Page 10 #8 Updated to state: Payer "A" Record - Added Amount Code 2, Card Not Present Transactions, in field positions 67-78 of the Payee "B" Record.
11/7/2014	Publication 1220 Tax Year 2014	Page 10 #10 Updated to state; Payer "A" Record - Added Amount Code 2, Card Not Present Transactions, in field positions 67-78 of the Payee "B" Record. Added Amount Code B, Acquisition Premium, in field positions 175-186 of the Payee "B" Record.
11/7/2014	Publication 1220 Tax Year 2014	Page 11 #14 Updated to state: Payer "A" Record – Added new Amount Code 7, FMV of Certain Specified Assets, in field positions 127-138 of the Payee "B" Record.
11/7/2014	Publication 1220 Tax Year 2014	Page 27 Updated to state: Transmitters should notify the IRS of any application changes in writing.
11/7/2014	Publication 1220 Tax Year 2014	Page 59 – Updated Payer "A" Record Layout Table Positions 134-173 "Payer Shipping Address."
11/7/2014	Publication 1220 Tax Year 2014	Page 85 – Updated 1099-K Record Layout Table: State Income Tax Withheld, Positions 723-734

Date	Publication	Update
12/1/2014	Part A, Sec. 5, Additional Resources	Topic Form 4419 – Revised location of link to: https://fire.irs.gov/
12/1/2014	Part A Sec. 3, What's New For Tax Year 2014	Updated # 17 to state: Must contain at least one special character #?!@$%^&*.,'-
12/1/2014	Part B, Sec. 3, Connecting to FIRE	Revised to state: The FIRE Production System is available from January 20, 2015 to December 11, 2015. Must contain at least one special character #?!@$%^&*.,'-
12/1/2014	Part B, Sec. 5, Electronic Submissions	Revised to state: FIRE Production System will be down from 6 p.m. (EST) December 12, 2014, through January 19, 2015, for yearly updates.

Publication 1220 (Rev. 11-2014) Catalog Number 61275P Department of the Treasury **Internal Revenue Service** www.irs.gov